BOSCH

GRL 600 CHV | LR 60 | RC 6 Professional

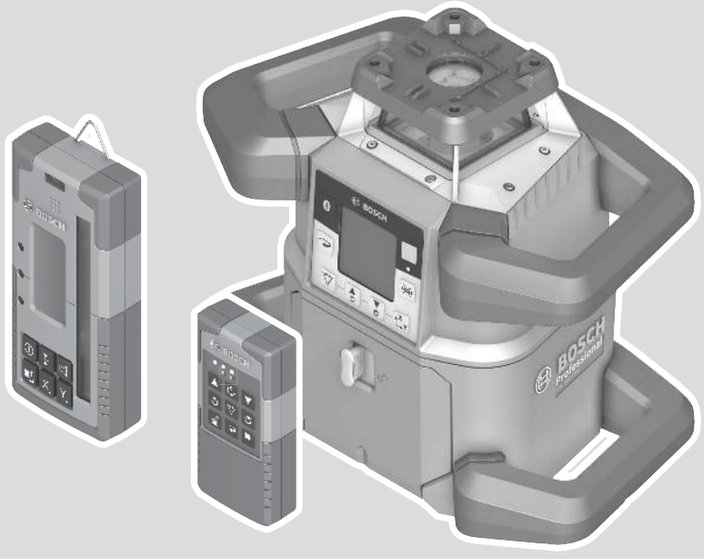

Robert Bosch Power Tools GmbH
70538 Stuttgart
GERMANY

www.bosch-pt.com

1 609 92A 6XG (2021.07) T / 41

1 609 92A 6XG

en Original instructions

English ..... Page 13

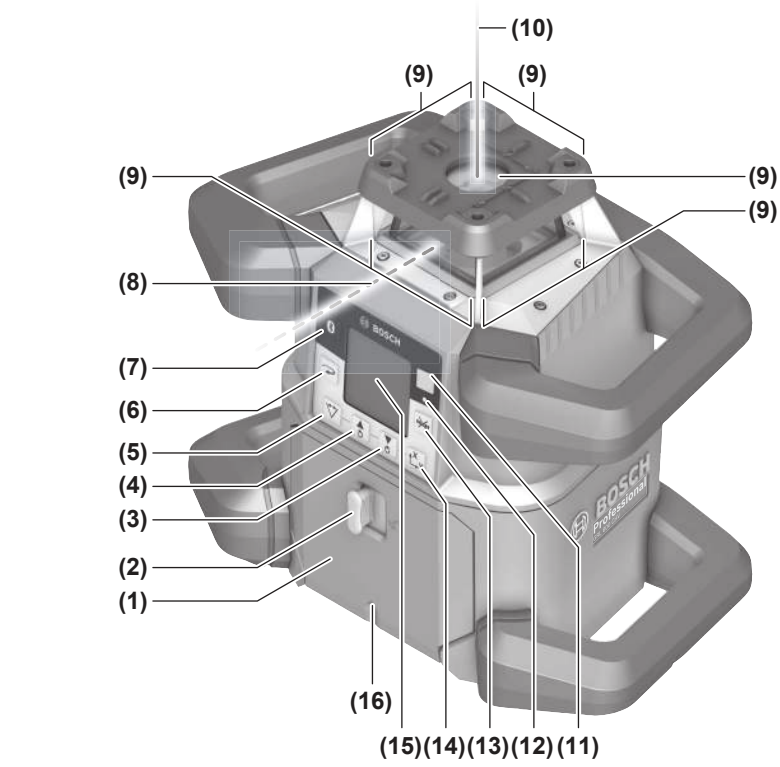

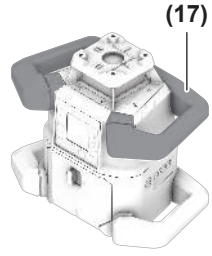

GRL 600 CHV



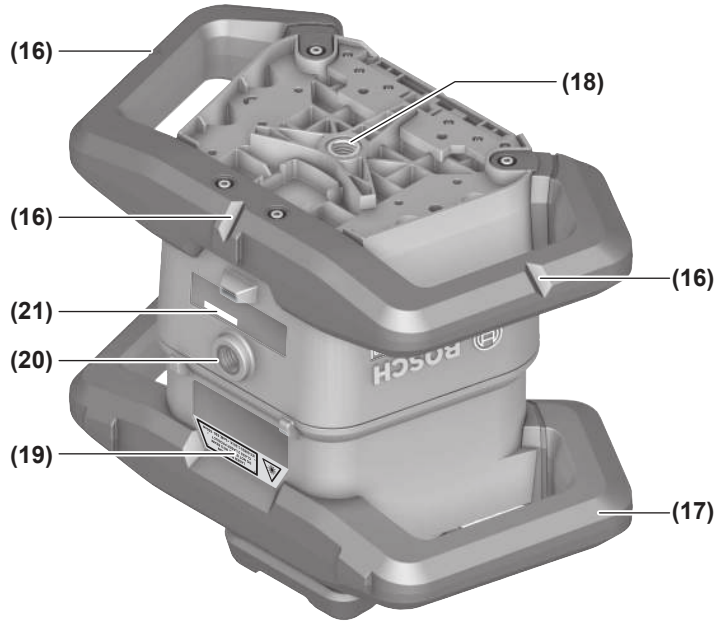
(16)
(18)
(16)
(16)
(21)
(20)
(19)
(17)

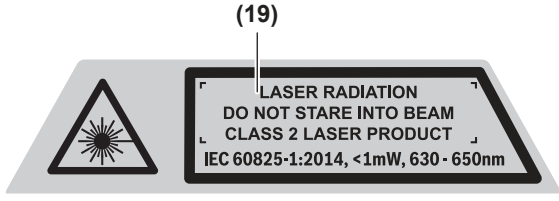
(19)
LASER RADIATION
DO NOT STARE INTO BEAM
CLASS 2 LASER PRODUCT
IEC 60825-1:2014, <1mW, 630 - 650nm

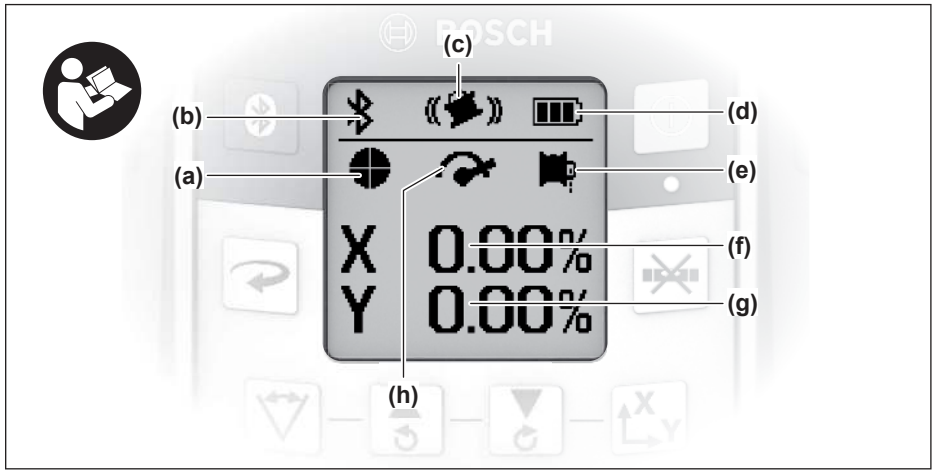
(c)
(b)
(d)
(a)
(e)
X 0.00%
(f)
Y 0.00%
(g)
(h)

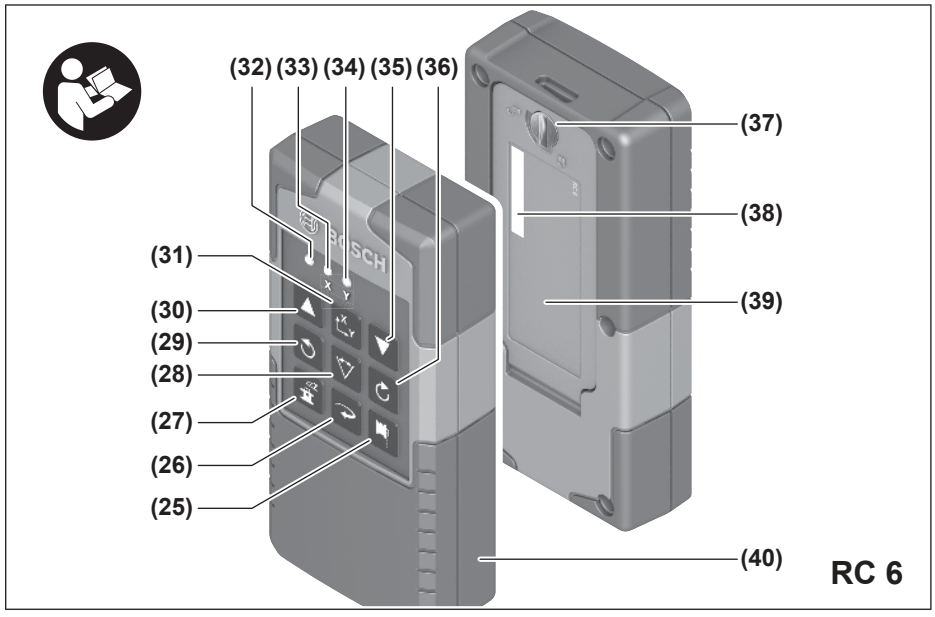
(32) (33) (34) (35) (36)
(37)
(38)
(31)
(39)
(30)
(29)
(28)
(27)
(26)
(25)
(40)
RC 6

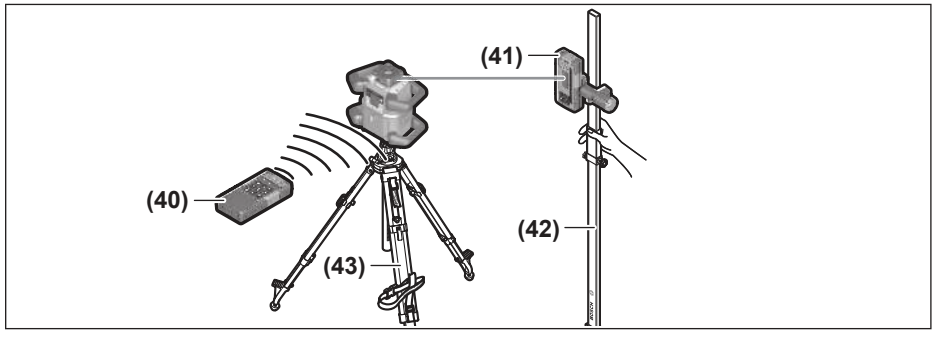
(41)
(40)
(42)
(43)

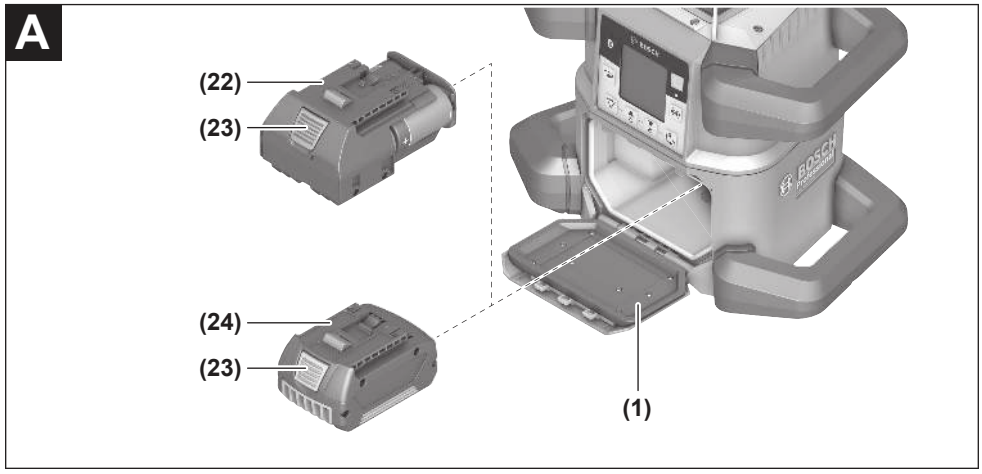
A
(22)
(23)
(24)
(23)
(1)

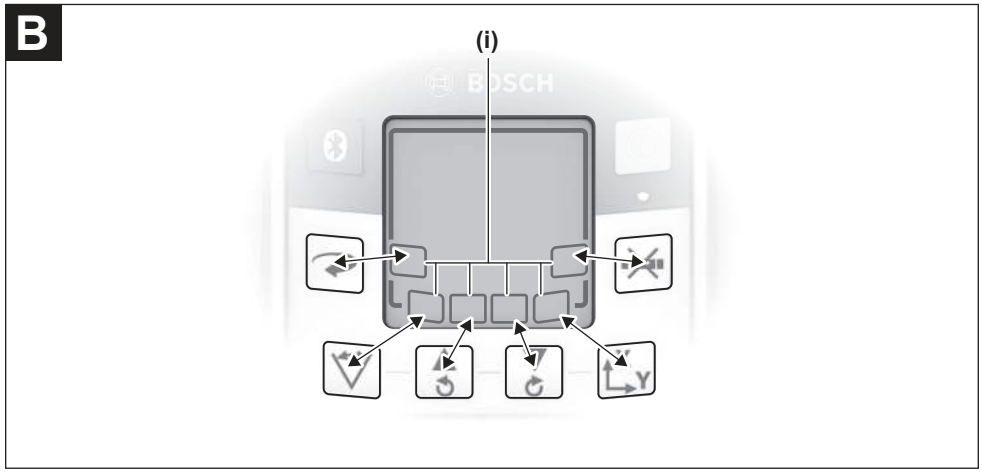
B
(i)

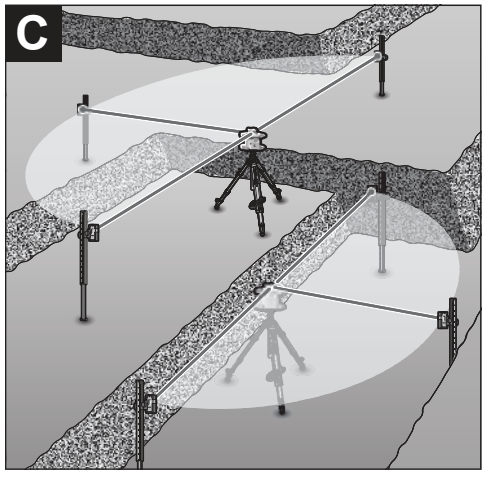
C

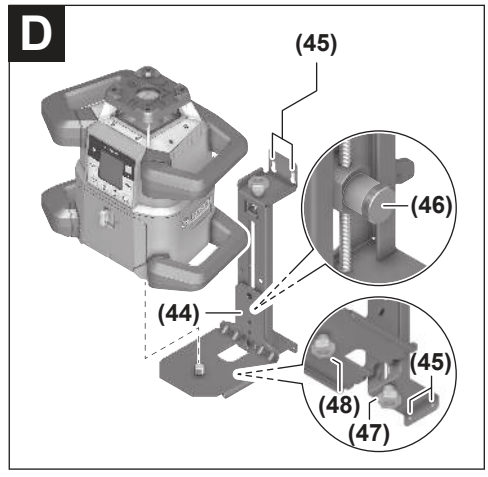
D
(45)
(46)
(44)
(45)
(48)
(47)

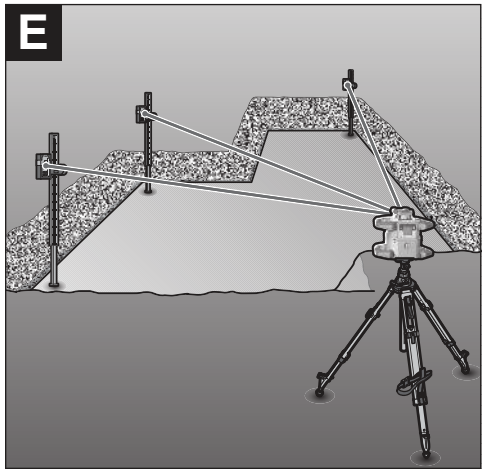
E

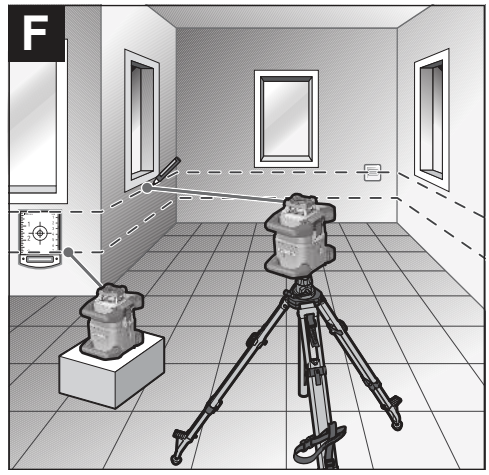
F

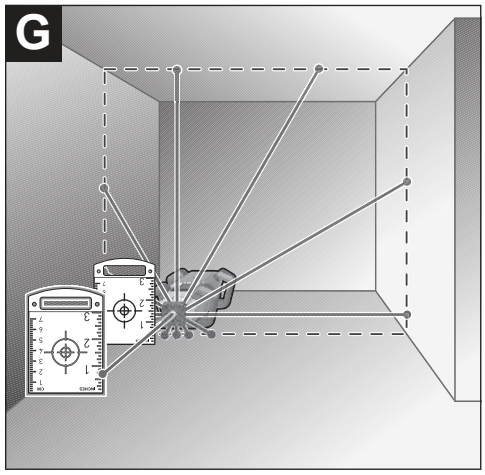
G

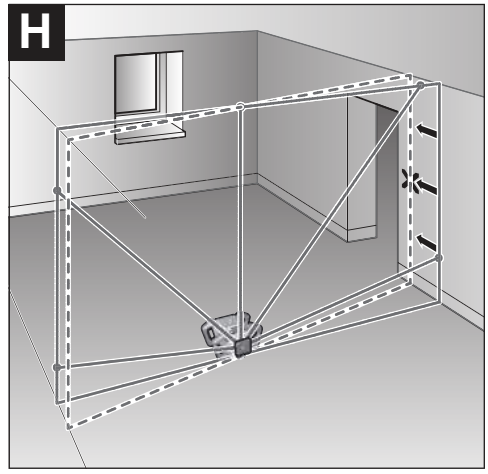
H

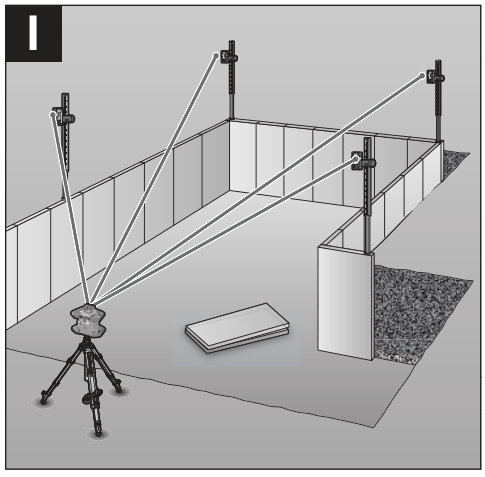
I

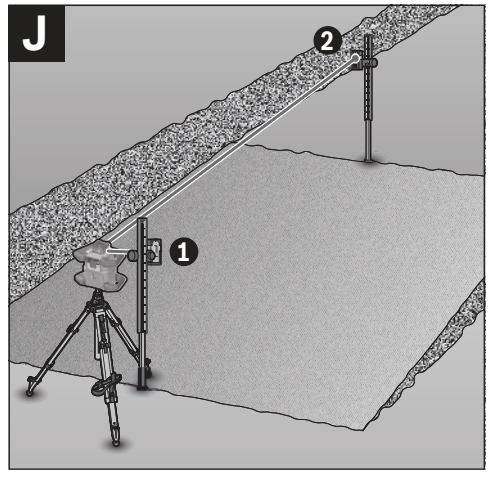
J
2
1



(49)
1 608 M00 05B

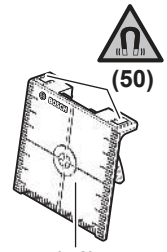

(50)

(51)
1 608 M00 05C

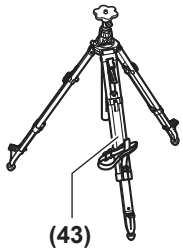

(43)
BT 300 HD
0 601 091 400

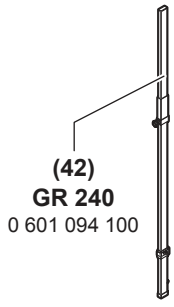

(42)
GR 240
0 601 094 100

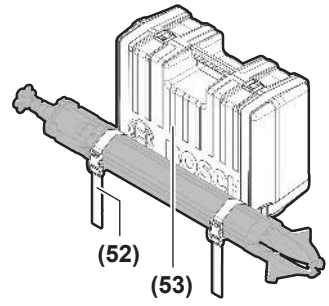

(52)

(53)

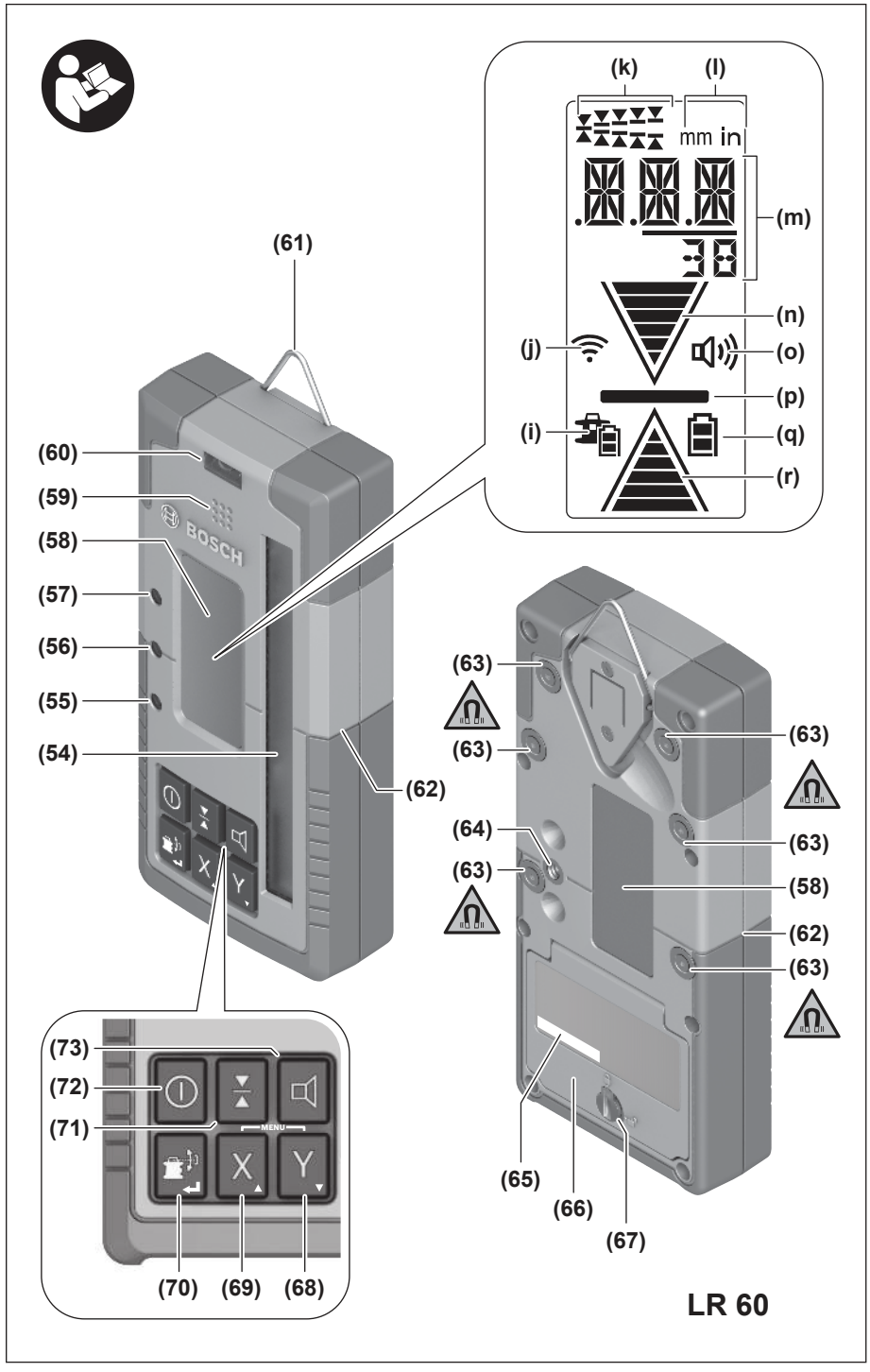
(k)
(l)
mm in
(m)
(n)
(j)
(o)
(p)
(i)
(q)
(r)
(61)
(60)
(59)
(58)
(57)
(56)
(55)
(54)
(62)
BOSCH
(63)
(64)
(65)
(66)
(67)
(73)
(72)
(71)
MENU
(70)
(69)
(68)
LR 60

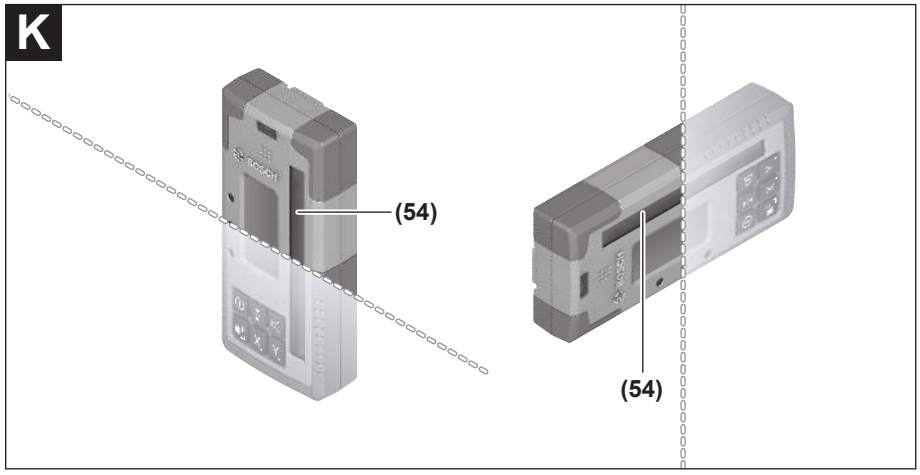
K
(54)
(54)

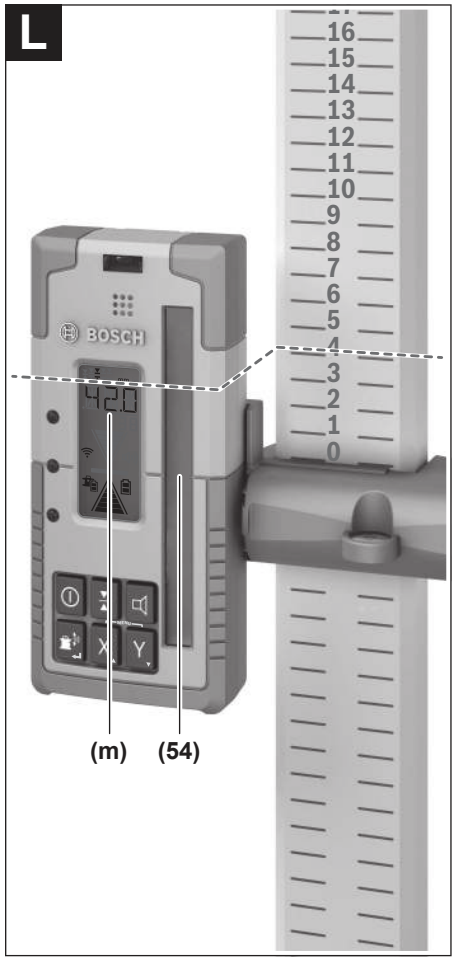
L
16
15
14
13
12
11
10
9
8
7
6
5
4
3
2
1
0
BOSCH
420
(m)
(54)

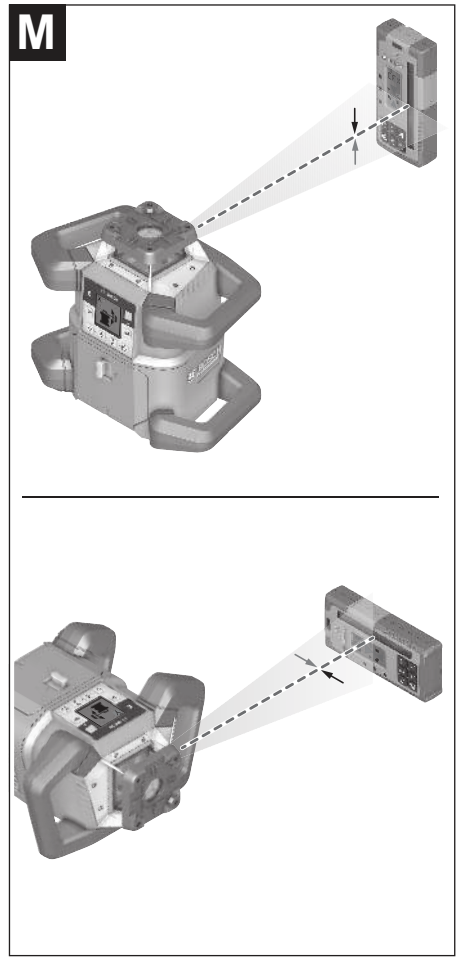
M

N

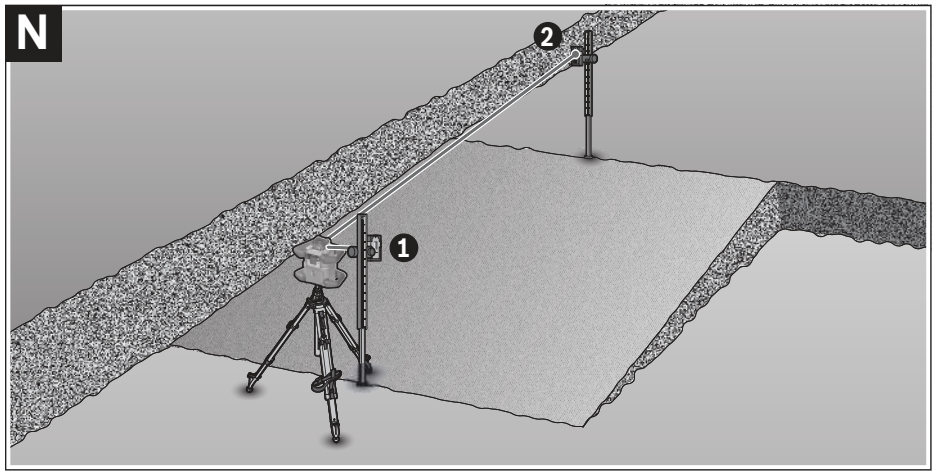

O

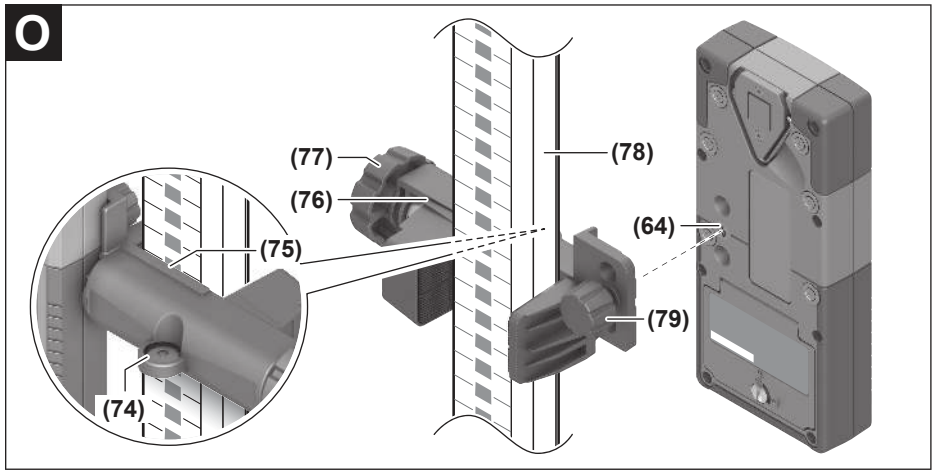

P

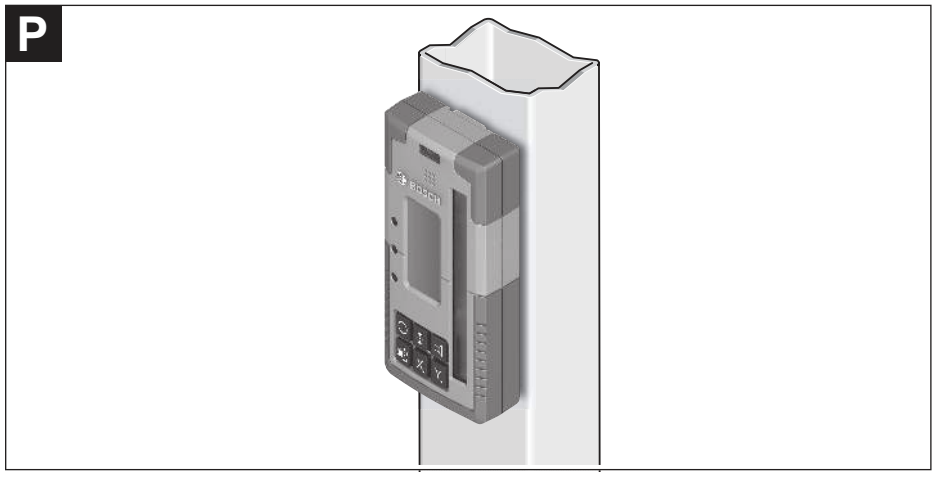

Table of contents

GRL 600 CHV + RC 6 ..... page 13
- Safety Instructions for Rotary Lasers and Remote Control ..... page 13
- Product Description and Specifications ..... page 14
  - Intended Use ..... page 14
  - Product features ..... page 14
  - Technical data ..... page 15
- Assembly ..... page 17
  - Measuring Tool Power Supply ..... page 17
  - Remote control power supply ..... page 18
- Operation ..... page 18
  - Starting Operation of the remote control ..... page 18
  - Starting Operation of the rotary laser ..... page 19
  - Operating Modes ..... page 21
  - Automatic Levelling ..... page 22
  - Manual operation ..... page 23
  - Functions ..... page 24
  - Accuracy Check of the Measuring Tool ..... page 25
  - Calibrating the measuring tool ..... page 25
  - Working Advice ..... page 28
  - Example applications ..... page 29
  - Overview of status indicators ..... page 30
  - Overview of control options for the functions ..... page 30
  - Rectifying errors ..... page 31
- Maintenance and Service ..... page 32
  - Maintenance and Cleaning ..... page 32
  - After-Sales Service and Application Service ..... page 32
  - Transport ..... page 33
  - Disposal ..... page 33

LR 60 ..... page 34
- Safety Instructions ..... page 34
- Product Description and Specifications ..... page 34
  - Intended Use ..... page 34
  - Product Features ..... page 34
  - Technical Data ..... page 35
- Assembly ..... page 35
  - Inserting/Changing the Batteries ..... page 35
  - Rotary Laser Battery Charge Indicator ..... page 36
- Operation ..... page 36
  - Starting operation ..... page 36
  - Settings ..... page 37
  - Functions ..... page 38
  - Working Advice ..... page 39
  - Rectifying errors ..... page 39
  - Assignment of Functions ..... page 39
- Maintenance and Service ..... page 39
  - Maintenance and Cleaning ..... page 39
  - After-Sales Service and Application Service ..... page 39
  - Disposal ..... page 40

English

GRL 600 CHV + RC 6

Safety Instructions for Rotary Lasers and Remote Control



All instructions must be read and observed in order to enable work to be carried out safely. The integrated safeguards may be compromised if these instructions are not observed. Never make warning signs unrecognisable. STORE THESE INSTRUCTIONS IN A SAFE PLACE AND INCLUDE THEM WITH THE PRODUCT WHEN GIVING IT TO A THIRD PARTY.

- **Warning! If operating or adjustment devices other than those specified here are used or other procedures are carried out, this can lead to dangerous exposure to radiation.**
- **The measuring tool is delivered with a laser warning sign (marked in the illustration of the measuring tool on the graphics page).**
- **If the text of the laser warning label is not in your national language, stick the provided warning label in your national language over it before operating for the first time.**



Do not direct the laser beam at persons or animals and do not stare into the direct or reflected laser beam yourself. You could blind somebody, cause accidents or damage your eyes.

- **If laser radiation hits your eye, you must close your eyes and immediately turn your head away from the beam.**
- **Do not make any modifications to the laser equipment.** The setting options described in these operating instructions can be used safely.
- **Do not use the laser goggles (accessory) as protective goggles.** The laser goggles make the laser beam easier to see; they do not protect you against laser radiation.
- **Do not use the laser goggles (accessory) as sunglasses or while driving.** The laser goggles do not provide full UV protection and impair your ability to see colours.
- **Have your product serviced only by a qualified specialist using only original replacement parts.** This will ensure that the safety of the product is maintained.
- **Do not let children use the laser measuring tool unsupervised.** They could unintentionally blind themselves or other persons.
- **Do not operate in potentially explosive atmospheres, such as in the presence of flammable liquids, gases or dusts.** Sparks may be produced, which can ignite dust or fumes.
- **Do not use any optical instruments such as binoculars or magnifying glasses to view the radiation source.** Doing so can damage your eyes.
- **Do not open the rechargeable batteries or batteries.** There is a risk of short-circuiting.
- **In case of damage and improper use of the battery, vapours may be emitted. The battery can set alight or explode.** Ensure the area is well ventilated and seek medical attention should you experience any adverse effects. The vapours may irritate the respiratory system.
- **If used incorrectly or if the battery is damaged, flammable liquid may be ejected from the battery. Contact with this liquid should be avoided. If contact accidentally occurs, rinse off with water. If the liquid comes into contact with your eyes, seek additional medical attention.** Liquid ejected from the battery may cause irritation or burns.
- **The battery can be damaged by pointed objects such as nails or screwdrivers or by force applied externally.** An internal short circuit may occur, causing the battery to burn, smoke, explode or overheat.
- **When the battery is not in use, keep it away from paper clips, coins, keys, nails, screws or other small metal objects that could make a connection from one terminal to another.** A short circuit between the battery terminals may cause burns or a fire.
- **Only use the Bosch rechargeable battery with products from the manufacturer.** This is the only way in which you can protect the battery against dangerous overload.
- **Only charge the batteries using chargers recommended by the manufacturer.** A charger that is suitable for one type of battery may pose a fire risk when used with a different battery.



Protect the rechargeable batteries against heat, e.g. against continuous sunlight, fire, dirt, water, and moisture. There is a risk of explosion and short circuit.



Keep the magnetic accessories away from implants and other medical devices, e.g. pacemakers or insulin pumps. The magnets in the accessories generate a field that can im-

pair the function of implants and medical devices.

- ▶ **Keep the magnetic accessories away from magnetic data storage media and magnetically-sensitive devices.** The effect of the magnets in the accessories can lead to irreversible data loss.
- ▶ **The measuring tool is equipped with a wireless interface. Local operating restrictions, e.g. in aeroplanes or hospitals, must be observed.**

The *Bluetooth*® word mark and logos are registered trademarks owned by Bluetooth SIG, Inc. and any use of such marks by Robert Bosch Power Tools GmbH is under license.

- ▶ **Caution! When using the measuring tool with *Bluetooth*®, a fault may occur in other devices and systems, aeroplanes and medical devices (e.g. pacemakers, hearing aids). Also, damage to people and animals in the immediate vicinity cannot be completely excluded. Do not use the measuring tool with *Bluetooth*® in the vicinity of medical devices, petrol stations, chemical plants, areas with a potentially explosive atmosphere and in blasting areas. Do not use the measuring tool with *Bluetooth*® on aeroplanes. Avoid using the product near your body for extended periods.**

Product Description and Specifications

Please observe the illustrations at the beginning of this operating manual.

Intended Use

Rotary laser

The measuring tool is intended for establishing and checking exactly horizontal height profiles, vertical lines, alignments and plumb points.

The measuring tool is suitable for indoor and outdoor use.

Remote control

The remote control is intended for controlling the **Bosch** rotary lasers via *Bluetooth*®.

The remote control is suitable for indoor and outdoor use.

Product features

The numbering of the product features refers to the illustration of the measuring tool and remote control on the graphics pages.

Rotary laser

(1) Battery compartment cover

(2) Battery compartment cover locking mechanism

(3) Slope button down ▼/Button for clockwise rotation

(4) Slope button up ▲/Button for anticlockwise rotation

(5) Line operation button

(6) Rotational operation button

(7) *Bluetooth*® button

(8) Variable laser beam

(9) Laser beam outlet aperture

(10) Upwards plumb point[a)]

(11) On/off button

(12) Status indicator

(13) Manual operation button

(14) Slope button

(15) Display

(16) Notch for orientation

(17) Carrying handle

(18) Tripod mount 5/8" (horizontal)

(19) Laser warning label

(20) Tripod mount 5/8" (vertical)

(21) Serial number

(22) Battery adapter

(23) Release button for rechargeable battery/battery adapter[b)]

(24) Rechargeable battery[b)]

a) In vertical mode, the upwards plumb point applies as a 90° reference point.

b) **Accessories shown or described are not included with the product as standard. You can find the complete selection of accessories in our accessories range.**

Rotary laser indicator elements

(a) Laser operating mode indicator

(b) *Bluetooth*® connection indicator

(c) Shock-warning function indicator

(d) Battery charge indicator for rechargeable battery/non-rechargeable batteries

(e) Plumb point function indicator (downwards)

(f) X-axis slope angle indicator

(g) Y-axis slope angle indicator

(h) Rotational speed indicator

(i) Softkey symbols

Remote control

(25) Button for plumb point function (downwards)

(26) Rotational operation button

(27) Sleep mode button

(28) Line operation button

(29) Button for anticlockwise rotation

(30) Slope button up

(31) Slope button

(32) Signal transmission indicator

(33) X-axis status indicator
(34) Y-axis status indicator
(35) Slope button down
(36) Button for clockwise rotation
(37) Battery compartment cover locking mechanism
(38) Serial number
(39) Battery compartment cover
(40) Remote control[a)]

a) **Accessories shown or described are not included with the product as standard. You can find the complete selection of accessories in our accessories range.**

Accessories/replacement parts

(41) Laser receiver[a)]
(42) Measuring rod[a)]
(43) Tripod[a)]
(44) Wall mount/alignment unit[a)]
(45) Fixing holes for wall mount[a)]
(46) Push button for rough adjustment of the wall mount[a)]
(47) Wall mount fine adjustment screw[a)]
(48) 5/8" screw for wall mount[a)]
(49) Laser viewing glasses[a)]
(50) Magnet[a)]
(51) Laser target plate[a)]
(52) Strap[a)]
(53) Case[a)]

a) **Accessories shown or described are not included with the product as standard. You can find the complete selection of accessories in our accessories range.**

Technical data

Rotary laser	GRL 600 CHV
Article number	**3 601 K61 F..**
Working range (radius)	
– Without laser receiver, max.[A)]	30 m
– With laser receiver, max.	300 m
Levelling accuracy at 30 m distance[B)C)]	
– horizontal	±1.5 mm
– vertical	±3 mm
Self-levelling range	±8.5 % (±5°)
Levelling time (at a slope of up to 3 %)	30 s
Rotational speed	150/300/600 min^{-1}
Single/dual-axis slope operation	±8.5 %
Slope operation accuracy[B)D)]	±0.2 %
Max. altitude	2000 m
Relative air humidity max.	90 %
Pollution degree according to IEC 61010-1	2[E)]
Laser class	2
Laser type	630–650 nm, < 1 mW
Divergence	< 1.5 mrad (full angle)
Recommended laser receiver	LR 60
Tripod mount (horizontal/vertical)	5/8"
Measuring tool power supply	
– Rechargeable battery (Li-ion)	18 V
– Non-rechargeable batteries (alkaline manganese) (with battery adapter)	4 × 1.5 V LR20 (D)
Approx. operating time	
– With rechargeable battery (4 Ah)	60 h
– With non-rechargeable batteries	70 h
Bluetooth® measuring tool	
– Class	1

Rotary laser	**GRL 600 CHV**
– Compatibility[F)]	*Bluetooth*® 5.0/4.X (Low Energy)
– Max. signal range[G)]	100 m
– Operating frequency range	2402–2480 MHz
– Max. transmission power	6.3 mW
Bluetooth® smartphone	
– Compatibility[F)]	*Bluetooth*® 5.0/4.X (Low Energy)
– Operating system[H)]	Android 6 (and above) iOS 11 (and above)
Weight according to EPTA-Procedure 01:2014	
– With rechargeable battery[I)]	4.2–4.8 kg
– With non-rechargeable batteries	4.6 kg
Dimensions (length × width × height)	327 × 188 × 278 mm
Protection rating	IP68
Tipping test height[J)]	2 m
Recommended ambient temperature during charging	0 °C to +35 °C
Permitted ambient temperature	
– During operation	–10 °C to +50 °C
– During storage	–20 °C to +50 °C
Recommended rechargeable batteries	GBA 18V... ProCORE18V 4.0 Ah/8.0 Ah
Recommended chargers	GAL 18... GAX 18... GAL 36...

A) The working range may be reduced by unfavourable environmental conditions (e.g. direct sunlight).

B) At **20** °C

C) Along the axes

D) At a maximum slope of ±8.5%, the maximum deviation is ±0.2%.

E) Only non-conductive deposits occur, whereby occasional temporary conductivity caused by condensation is expected.

F) When using *Bluetooth*® Low Energy devices, it may not be possible to establish a connection depending on the model and operating system. *Bluetooth*® devices must support the SPP profile.

G) The signal range may vary greatly depending on external conditions, including the receiving device used. The *Bluetooth*® range may be significantly weaker inside closed rooms and through metallic barriers (e.g. walls, shelving units, cases, etc.).

H) Higher versions of the operating system may be necessary depending on the **Bosch Levelling Remote App** updates.

I) Depends on battery in use

J) The measuring tool, mounted in a horizontal position on a tripod, tips on flat concrete floor.

The serial number **(21)** on the type plate is used to clearly identify your measuring tool.

Remote control	**RC 6**
Article number	**3 601 K69 R..**
Max. working range (radius)	100 m
Operating temperature	–10 °C to +50 °C
Storage temperature	–20 °C to +70 °C
Max. altitude	2000 m
Relative air humidity max.	90 %
Pollution degree according to IEC 61010-1	2[A)]
Bluetooth® remote control	
– Class	1
– Compatibility[B)]	*Bluetooth*® 5.0/4.X (Low Energy)
– Max. signal range[C)]	100 m

Remote control	RC 6
– Operating frequency range	2402–2480 MHz
– Max. transmission power	6.3 mW
Batteries	2 × 1.5 V LR6 (AA)
Weight according to EPTA-Procedure 01:2014	0.17 kg
Dimensions (length × width × height)	122 × 59 × 27 mm
Protection rating	IP54

A) Only non-conductive deposits occur, whereby occasional temporary conductivity caused by condensation is expected.

B) When using *Bluetooth*® Low Energy devices, it may not be possible to establish a connection depending on the model and operating system. *Bluetooth*® devices must support the SPP profile.

C) The signal range may vary greatly depending on external conditions, including the receiving device used. The *Bluetooth*® range may be significantly weaker inside closed rooms and through metallic barriers (e.g. walls, shelving units, cases, etc.).

Assembly

Measuring Tool Power Supply

The measuring tool can be operated either with conventional non-rechargeable batteries or with a Bosch lithium-ion battery.

Do not use any commercially available rechargeable batteries (e.g. nickel metal hydride).

Operation with Rechargeable Battery

▶ **Use only the chargers listed in the technical data.** Only these chargers are matched to the lithium-ion battery of your measuring tool.

Note: The use of batteries unsuitable for your measuring tool can lead to malfunctions or damage to the measuring tool.

Note: The battery is supplied partially charged. To ensure full battery capacity, fully charge the battery in the charger before using your tool for the first time.

The lithium-ion battery can be charged at any time without reducing its service life. Interrupting the charging process does not damage the battery.

The lithium-ion battery is protected against deep discharge by the "Electronic Cell Protection (ECP)". A protective circuit switches the measuring tool off when the battery is drained.

▶ **Do not switch the measuring tool back on after it has been switched off by the protective circuit.** This can damage the battery.

Battery charge indicator

If the rechargeable battery is removed from the measuring tool, its state of charge may be indicated by the green LEDs of the battery charge indicator on the battery.

Press the button for the battery charge indicator On or to show the state of charge.

If no LED lights up after pressing the button for the battery charge indicator, then the battery is defective and must be replaced.

Battery model GBA 18V...



LEDs	Capacity
3× continuous green light	60–100 %
2× continuous green light	30–60 %
1× continuous green light	5–30 %
1× flashing green light	0–5 %

Battery model ProCORE18V...



LEDs	Capacity
5× continuous green light	80–100 %
4× continuous green light	60–80 %
3× continuous green light	40–60 %
2× continuous green light	20–40 %
1× continuous green light	5–20 %
1× flashing green light	0–5 %

Recommendations for Optimal Handling of the Battery

Protect the battery against moisture and water.

Only store the battery within a temperature range of –20 to 50 °C. Do not leave the battery in your car in the summer, for example.

Occasionally clean the ventilation slots on the battery using a soft brush that is clean and dry.

A significantly reduced operating time after charging indicates that the battery has deteriorated and must be replaced.

Follow the instructions on correct disposal.

Operation with Non-Rechargeable Batteries

It is recommended that you use alkaline manganese batteries to operate the measuring tool.

Put the batteries into the battery adapter **(22)**. Make sure that the polarity is correct and corresponds to the diagram on the battery adapter.

- ▶ **The battery adapter is intended only for use in designated Bosch measuring tools and must not be used with power tools.**

Always replace all the batteries at the same time. Only use batteries from the same manufacturer and which have the same capacity.

- ▶ **Take the batteries out of the measuring tool when you are not using it for a prolonged period of time.** The batteries can corrode and self-discharge during prolonged storage in the measuring tool.

Changing the batteries/rechargeable battery (see figure A)

To replace the batteries/rechargeable battery, move the locking mechanism **(2)** of the battery compartment cover into position and open the battery compartment cover **(1)**.

Insert either a charged rechargeable battery **(24)** or the battery adapter **(22)** with fitted batteries into the battery compartment until you feel it click into place.

To remove the rechargeable battery **(24)** or battery adapter **(22)**, press the release button **(23)** and pull the rechargeable battery or battery adapter out of the battery compartment. **Do not use force to do this.**

Close the battery compartment cover **(1)** and move the locking mechanism **(2)** into position .

Battery Charge Indicator

The battery charge indicator **(d)** will indicate the state of charge of the batteries/rechargeable batteries on the display:

Indicator	Capacity
	60 – 100%
	30 – 60%
	5 – 30%
	0 – 5%



If the batteries or rechargeable battery are empty, a warning message will appear for a few seconds and the status indicator **(12)** will flash red quickly. The measuring tool will then switch itself off.

Remote control power supply

Using alkali-manganese batteries is recommended to operate the remote control.

Turn the locking mechanism **(37)** of the battery compartment cover into position (e.g. using a coin). Open the battery compartment cover **(39)** and insert the batteries.

When inserting the batteries, ensure that the polarity is correct according to the illustration on the inside of the battery compartment.

Close the battery compartment cover **(39)** and turn the locking mechanism **(37)** of the battery compartment cover into position .

- ▶ **Remove the batteries from the remote control when not using it for longer periods.** The batteries can corrode and self-discharge during prolonged storage in the remote control.

Note: The *Bluetooth*® function remains active as long as batteries are fitted in the remote control. The batteries can be removed in order to prevent energy consumption by this function.

Operation

- ▶ **Protect the measuring tool and remote control against moisture and direct sunlight.**
- ▶ **Do not expose the measuring tool or remote control to any extreme temperatures or variations in temperature.** For example, do not leave them in a car for extended periods of time. In case of large variations in temperature, allow the measuring tool and the remote control to adjust to the ambient temperature before putting them into operation. Before continuing work with the measuring tool, always perform an accuracy check (see "Accuracy Check of the Measuring Tool", page 25).
  The precision of the measuring tool may be compromised if exposed to extreme temperatures or fluctuations in temperature.
- ▶ **Avoid substantial knocks to the measuring tool and avoid dropping it.** Always carry out an accuracy check before continuing work if the measuring tool has been subjected to severe external influences (see "Accuracy Check of the Measuring Tool", page 25).

Starting Operation of the remote control

The remote control will only work if it is fitted with batteries that are sufficiently charged.

To activate the remote control, press any button on the remote control. The status of the axes on the rotary laser is called up and displayed in the **(33)** and **(34)** status indicators on the remote control.

Provided the status indicators are lit up, the relevant setting on the rotary laser is changed with every subsequent press of a button on the remote control. The signal transmission indicator **(32)** on the remote control lights up to show that a signal is being transmitted.

In order to save energy, the remote control is deactivated after a short time and the **(33)** and **(34)** status indicators go out again.

It is not possible to switch the measuring tool on/off with the remote control.

Starting Operation of the rotary laser

▶ **Keep the work area free from obstacles that could reflect or obstruct the laser beam. For example, cover any reflective or shiny surfaces. Do not measure through panes of glass or similar materials.** The measurements may be distorted by a reflected or obstructed laser beam.

Setting up the measuring tool

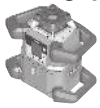

Horizontal position



Vertical position

Position the measuring tool on a stable surface in the horizontal or vertical position, mount it on the tripod **(43)** or on the wall mount **(44)** with the alignment unit.

Due to its high levelling accuracy, the measuring tool is very sensitive to knocks and vibrations and changes in position. Take care, therefore, that the measuring tool is stable to avoid interruptions to the operation caused by relevelling.

Operating the measuring tool

The main functions of the measuring tool are controlled by the buttons on the measuring tool and the remote control **(40)**. Additional functions are available via the remote control **(40)**, the laser receiver **(41)**, or via the **Bosch Levelling Remote App** (see "Overview of control options for the functions", page 30).

For the indicator on the measuring tool's display **(15)**, the following applies:

– The current settings for this function will be indicated when a function button (e.g. the line operation button **(5)**) is pressed for the first time. The settings will be changed the next time a function button is pressed.
– In the lower part of the display, softkey symbols **(i)** are shown in various menus. The corresponding function keys (softkeys) arranged around the display can be used to execute the functions represented by the symbols **(i)** (see figure **B**). Depending on the corresponding menu, the symbols show the usable function buttons (e.g. the rotational operation button in the rotational operation menu **(6)**) or additional functions such as Next (▶), Back (◀) or Confirm (OK).
– The softkey symbols **(i)** also make it easy to recognise whether the Slope button down/Button for clockwise rotation **(3)** and Slope button up/Button for anticlockwise rotation **(4)** buttons in the current menu are used to slope downwards (▼) or slope upwards (▲) or to turn in a clockwise (↻) or anticlockwise (↺) direction.
– The display will automatically go back to the start screen five seconds after the last press of a button.
– The display **(15)** will light up with every press of a button or signal that reaches the measuring tool. The light will go out approximately one minute after the last press of a button.

Tilting or rotation in various functions can be accelerated if the respective tilting or rotation buttons on the measuring tool or the remote control are held down for longer.

All functions are reset to their standard setting when the measuring tool is switched off.

Switching On and Off

Note: After the first time the tool is started up and before beginning work, you should always perform an accuracy check (see "Accuracy Check of the Measuring Tool", page 25).

To **switch on** the measuring tool, press the on/off button **(11)**. A start sequence will appear for a few seconds, followed by the start screen. The measuring tool emits the variable laser beam **(8)** and the upwards plumb point **(10)** from the outlet apertures **(9)**.

▶ **Do not direct the laser beam at persons or animals and do not stare into the laser beam yourself (even from a distance).**

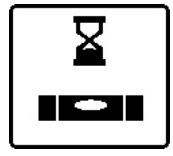

The levelling starts automatically and is shown by the flashing symbol for levelling in the display, the flashing laser beams and the status indicator **(12)** that is flashing green (see "Automatic Levelling", page 22).

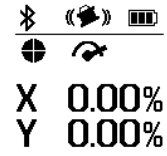

After levelling has successfully been completed, the start screen will appear, the laser beams will light up continuously, rotation will start and the status indicator **(12)** will light up green continuously.

▶ **Never leave the measuring tool unattended when switched on, and ensure the measuring tool is switched off after use.** Others may be blinded by the laser beam.



To **switch off** the measuring tool, press and hold the on/off button **(11)** until the switch-off symbol appears on the display.

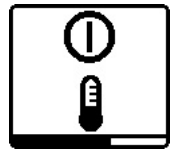

If the maximum permitted operating temperature of **50** °C is exceeded, a warning message will appear for a few seconds and the status indicator **(12)** will flash red.

The measuring tool will then shut down in order to protect the laser diode. Once it has cooled down, the measuring tool is operational again and can be switched back on.

Establishing a connection to the remote control/ laser receiver

In the default factory setting, the measuring tool and the remote control **(40)** and laser receiver **(41)** supplied are already connected via *Bluetooth*®.



To connect the remote control or the laser receiver, press and hold the *Bluetooth*® button **(7)** until the symbol for establishing a connection with the remote control/laser receiver appears on the display.

To establish a connection to the remote control, press and hold the button for anticlockwise rotation **(29)** and the button for clockwise rotation **(36)** on the remote control at the same time until the status indicators **(33)** and **(34)** begin to flash. While the connection to the remote control is being established, the status indicators on the remote control will alternately flash green.

To establish a connection to the laser receiver, press and hold the X-axis and Y-axis buttons on the laser receiver at the same time until the message that a connection has been established appears on the display of the laser receiver. To do this, consult the operating instructions for the laser receiver.



It will be confirmed on the display whether a connection has successfully been established to the remote control or the laser receiver.



If the attempt to establish a connection to the remote control is successful, the status indicators **(33)** and **(34)** on the remote control will light up green for 3 s.



If no connection could be established, an error message will appear on the display.

If the attempt to establish a connection to the remote control is not successful, status indicators **(33)** and **(34)** on the remote control will light up red for 3 s.

Two laser receivers can be connected to and work with the measuring tool at the same time.

If other remote controls or laser receivers are connected, the oldest connection will then be deleted.

Remote control via Bosch Levelling Remote App

The measuring tool is equipped with a *Bluetooth*® module which uses radio technology to enable remote control via a smartphone with a *Bluetooth*® interface.

The **Bosch Levelling Remote App** application (app) is required to use this function. You can download this in the app store for your terminal device (Apple App Store, Google Play Store).

Information about the system requirements for a *Bluetooth*® connection can be found on the Bosch website at www.bosch-pt.com

When remote controlling via *Bluetooth*®, poor reception conditions can cause time delays between the mobile terminal device and the measuring tool.

The *Bluetooth*® function is switched on by default.

To switch off *Bluetooth*® to control remotely via the app, press the *Bluetooth*® button **(7)**. The *Bluetooth*® connection indicator **(b)** will go out on the start screen.

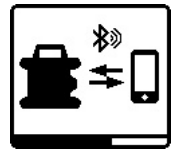

To switch back on *Bluetooth*® to control remotely via the app, briefly press the *Bluetooth*® button **(7)**. The symbol for establishing a connection to the smartphone will appear on the display.

Ensure that the *Bluetooth*® interface is activated on your mobile device.

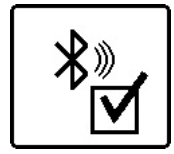

It will be confirmed on the display whether a connection has successfully been established. The existing connection is visible on the *Bluetooth*® connection indicator **(b)** on the start screen.

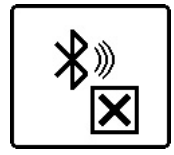

If no connection could be established, an error message will appear on the display.

The connection between mobile end device and measuring tool is established after the Bosch application has started. If multiple active measuring tools are found, select the appropriate measuring tool. A connection will be established automatically if only one active measuring tool is found.

The *Bluetooth*® connection may be interrupted if the distance between the measuring tool and the mobile device is too great or is blocked, and if there are any sources of electromagnetic interference. In this case, another attempt to establish a connection will automatically begin.

Sleep mode

During breaks from work, you can set the measuring tool to sleep mode. All your settings will still be saved.



To **switch on** sleep mode, briefly press the on/off button **(11)**. In the menu which subsequently appears, press the on/off button **(11)** as many times as needed until sleep mode has been selected. Confirm your selection with ok by pressing the slope button **(14)**.

Alternatively, you can switch on sleep mode by pressing the sleep mode button **(27)** on the remote control.



When sleep mode is switched on, the sleep mode symbol will be indicated on the display. The status indicator **(12)** will slowly flash green. The shock-warning function will remain activated and all settings will be saved.

To **switch off** sleep mode, briefly press the on/off button **(11)** on the measuring tool or press the sleep mode button **(27)** on the remote control.

You can also switch off the measuring tool while it is in sleep mode. Press and hold the on/off button **(11)** until the switch-off symbol appears on the display. All other buttons on the measuring tool and the remote control will be deactivated.

It is also possible to switch sleep mode on and off via the **Bosch Levelling Remote App**.

Locking the keyboard



The keyboard of the measuring tool and the remote control can be locked via the **Bosch Levelling Remote App**. The keyboard lock symbol will appear on the measuring tool's display.

The keyboard can be unlocked as follows:
- via the **Bosch Levelling Remote App**,
- by switching the measuring tool on and off via the on/off button **(11)**
- or by pressing the ▲/↻ **(4)** and ▼/↺ **(3)** buttons on the measuring tool at the same time.

Operating Modes

Alignment of X and Y-axis

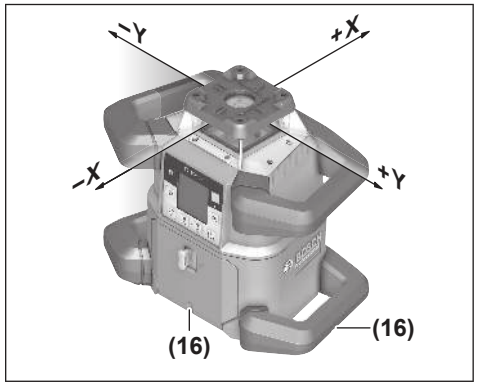

The alignment of the X and Y axes is marked on the housing above the rotation head. The markings are exactly above the alignment notches **(16)** at the bottom edge of the housing and on the lower handle. The measuring tool can be aligned along the axes by using the alignment notches.

Operating modes overview

All three operating modes are possible with the measuring tool in horizontal and vertical position.



Rotational operation
Rotational operation is especially recommended when using the laser receiver. It is possible to select between different rotational speeds.

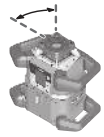

Line operation
In this operating mode, the variable laser beam moves within a defined aperture angle. This increases the visibility of the laser beam in comparison to rotational operation. You can select between different aperture angles.

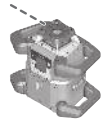

Point operation
In this operating mode, the best visibility of the variable laser beam can be reached. For example, it is used to easily project heights or to check building lines.

Line and point operation are not suitable for use with the laser receiver **(41)**.

Rotational operation

Each time after switching on, the measuring tool is in rotational operation mode with standard rotational speed (**600** min^{-1}).

To switch from line operation to rotational operation, press the rotational operation button **(6)** or the rotational operation button **(26)** on the remote control.



To change the rotational speed, press the rotational operation button **(6)** or the rotational operation button **(26)** on the remote control as many times as needed until the required speed is indicated on the display.

The set speed can be seen on the rotational speed indicator **(h)** on the start screen.

When working with the laser receiver, the highest rotational speed should be set. When not working with the laser receiver, reduce the rotational speed for improved visibility of the laser beam and use the laser googles **(49)**.

Line operation/point operation

To switch to line or point operation, press the line operation button **(5)** or the line operation button **(28)** on the remote control.

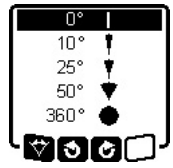

To change the aperture angle, press the line operation button **(5)** or the line operation button **(28)** on the remote control until the required operating mode is indicated on the display. The aperture angle is reduced in stages each time a button is pressed until point operation is achieved.

At 360°, the measuring tool is again in rotational operation. The rotational speed is the last set speed.

Note: Due to inertia, it is possible for the laser to slightly move beyond the end point of the laser line.

Turning the line/point within the rotational plane

In line and point operation, the laser line or the laser point can be positioned within the rotational plane of the laser. Rotation is possible by 360°.

To rotate **anticlockwise**, press the button ↺ **(4)** on the measuring tool or the button for anticlockwise rotation **(29)** on the remote control.

To rotate **clockwise**, press the button ↻ **(3)** on the measuring tool or the button for clockwise rotation **(36)** on the remote control.

Turning the rotational plane when in the vertical position

When the measuring tool is in the vertical position, it is possible to rotate the laser point, laser line or rotational plane around the X-axis for easy sighting out or parallel alignment in a range of ±**8.5** %.



To start the function, press the slope button **(14)** on the measuring tool or the slope button **(31)** on the remote control. The menu for setting the slope of the Y-axis will appear and the symbol for the Y-axis will flash.

To rotate the rotational plane, press the ▲ button **(4)** or the ▼ button **(3)** on the measuring tool or the up **(30)** or down **(35)** slope button on the remote control until the required position is reached.

Automatic downwards plumb point function in the vertical position

To align the measuring tool against a reference point on the ground when it is in the vertical position, the variable laser beam **(8)** can be turned downwards to be used as a plumb point. The plumb point function can only be started via remote control or the **Bosch Levelling Remote App** app.

The variable laser beam plumb point is not self-levelling. Therefore, ensure that the measuring tool is levelled in when starting the plumb point function.



To start the downwards plumb point function, press the plumb point function button **(25)** on the remote control. The plumb point function symbol will appear on the display while the variable laser beam is aligned vertically. After it has been successfully aligned, the plumb point function indicator **(e)** will appear on the start screen.

Automatic Levelling

Overview

After switching on, the measuring tool checks the horizontal and vertical position and automatically levels out any unevenness within the self-levelling range of approx. ±**8.5** % (±**5**°).

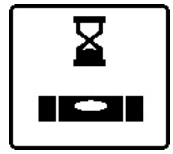

The symbol for levelling flashes on the display during levelling. The status indicator **(12)** on the measuring tool and the status indicator for the respective axis (**(34)** or **(33)**) on the remote control flash green at the same time.

The rotation is stopped until levelling has been completed and the laser beams are flashing. The start screen will appear after levelling has been successfully completed. The laser beams will light up continuously and rotation will start. The status indicator **(12)** on the measuring tool and the status indicator for the levelled axis (**(34)** or **(33)**) on the remote control will light up green continuously.



If the measuring tool is at a slant of more than 8.5 % or is positioned differently to the horizontal or vertical position, levelling will no longer be possible. An error message will appear on the display and the status indicator **(12)** will flash red.

Reposition the measuring tool and wait for it to re-level.



If the maximum levelling time is exceeded, levelling will be discontinued with an error message.

Reposition the measuring tool and briefly press the on/off button **(11)** to restart levelling.

Position changes

When the measuring tool is levelled in, it continuously checks the horizontal and vertical position. Re-levelling is automatically performed if there are any position changes.

Minimal position changes are levelled out without interrupting the operation. This automatically compensates subsoil ground vibrations or weather influences.

For **larger position changes**, the rotation of the laser beam will be stopped in order to avoid faulty measurements during the levelling process and the laser beams will flash. The levelling symbol appears on the display. The shock-warning function will be actuated, if required.

The measuring tool will automatically detect the horizontal or vertical position. To **change between the horizontal and the vertical position**, switch the measuring tool off, reposition it and switch it on again.



If the position is changed without switching on/off, an error message will appear and the status indicator **(12)** will flash red quickly. Briefly press the on/off button **(11)** to restart levelling.

Shock-warning function

The measuring tool has a shock-warning function. After position changes or shock to the measuring tool, or in case of ground vibrations, it keeps the measuring tool from levelling

in at changed positions, and thus prevents errors caused by a change in the measuring tool's position.

To activate shock warning:



The shock-warning function is switched on by default. It is activated approximately 30 s after the measuring tool has been switched on. During activation, the shock-warning function indicator **(c)** will flash on the display. The indicator lights up continuously after activation.

Shock warning actuated:



If the position of the measuring tool is changed or a severe knock is registered, the shock warning will be actuated. The laser will stop rotating and an error message will appear. The status indicator **(12)** will quickly flash red and a warning signal will sound at a fast rate.

Confirm the warning message with ok by pressing the slope button **(14)** on the measuring tool or the slope button **(31)** on the remote control. When working with automatic levelling (including slope operation), levelling is automatically restarted.

Now check the position of the laser beam at a reference point and, if necessary, correct the height or alignment of the measuring tool.

To switch off the shock-warning function:

On the start screen, the current setting is shown with the shock-warning indicator **(c)**:



Shock-warning function is switched on at high sensitivity.



Shock-warning function is switched off.



Briefly press the on/off button **(11)** to adjust the shock-warning function setting. Then press the on/off button **(11)** in the menu which subsequently appears as many times as needed until the required setting has been selected. Confirm your selection with ok by pressing the slope button **(14)**.

If the shock-warning function has been switched on, it will be activated after approximately 30 seconds.

Slope operation in the horizontal position

In the measuring tool's horizontal position, the X-axis and the Y-axis can be tilted independently of each other in a range of ±8.5%.



To tilt the X-axis, press the slope button **(14)** on the measuring tool or the slope button **(31)** on the remote control once. The menu for setting the slope of the X-axis will appear.

Set the required slope by using the buttons ▲ **(4)** or ▼ **(3)** on the measuring tool or using the up **(30)** or down **(35)** slope buttons on the remote control. Pressing both slope buttons on the measuring tool or on the remote control at the same time resets the slope back to 0.00%.



To tilt the Y-axis, press the slope button **(14)** on the measuring tool or the slope button **(31)** on the remote control again. The menu for setting the slope of the Y-axis will appear.

Set the required slope in the same way as outlined for the X-axis.

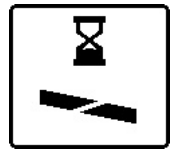

The selected slope is implemented on the measuring tool a few seconds after the last press of a button. Both the laser beam and the symbol for setting the slope on the display will flash until the process of setting the slope has been completed.

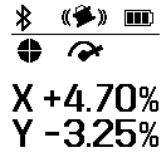

After the process of setting the slope has been completed, the set slope values of both axes will be shown on the start screen. The status indicator **(12)** on the measuring tool will light up red continuously. On the remote control, the status indicator for the tilted axis (**(34)** and/or **(33)**) will light up red continuously.

SlopeProtect

Temperature changes in the measuring tool can have effects on the set slope of the axes.

To avoid measurement inaccuracies, the slope of the axes is readjusted when exceeding the set temperature difference. The measuring tool is levelled in, then it returns to slope operation with the previously set values.

The slope is reset at temperature changes of ≥5 °C.

Manual operation

The automatic levelling of the measuring tool can be switched off (manual operation):

- in the horizontal position for both axes independently of each other,
- in the vertical position for the X-axis (the Y-axis cannot be levelled in the vertical position).

It is possible to set up the measuring tool at any inclination in the manual operation mode. The axes can also be tilted independently of each other in a range of ±8.5% on the measur-

ing tool. In manual operating mode, the slope value of an axis will not be shown on the display.

The status indicator **(12)** on the measuring tool will light up red continuously if

- at least one axis is set to manual operating mode in the horizontal position,
- the X-axis is set to manual operating mode in the vertical position.

The Y-axis status indicator **(34)** or the X-axis status indicator **(33)** on the remote control light up red continuously if the relevant axis is set to manual operating mode.

Manual operation cannot be started via remote control.

Manual operation in the horizontal position

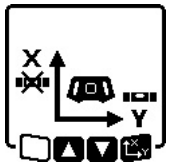

To switch off automatic levelling, press the manual operation button **(13)** as many times as needed until the required settings combination for both axes is achieved. In the illustrated example, automatic levelling for the X-axis is switched off and the Y-axis continues to be levelled.



To tilt an axis **with automatic levelling switched off**, press the slope button **(14) while the menu for manual operating mode is displayed.**

If automatic levelling is only switched off for one axis, it will only be possible to change the slope of that axis. When manually operating both axes, it is possible to switch between the axes by pressing the slope button **(14)** again. The symbol for the axis whose slope can be changed will flash.

Tilt the selected axis using the ▲ **(4)** or ▼ **(3)** buttons until the required position is reached.

Manual operation in the vertical position



To switch off automatic levelling for the X-axis, press the manual operation button **(13)** once. (The Y-axis cannot be levelled when in the vertical position.)



To tilt the X-axis without using automatic levelling, press the slope button **(14) while the manual operating mode menu is displayed.** The symbol for the X-axis will flash on the display.

Tilt the X-axis using the ▲ **(4)** or ▼ **(3)** buttons until the required position is reached.



To rotate the Y-axis, press the slope button **(14)** again **while manual operating mode menu is displayed.** The symbol for the Y-axis will flash on the display.

Rotate the Y-axis using the ▲ **(4)** or ▼ **(3)** buttons until the required position is reached.

Functions

CenterFind mode

In **CenterFind** mode, the measuring tool automatically attempts to align the laser beam to the centre line of the laser receiver by moving the rotation head up and down. The laser beam can be aligned to the X-axis or the Y-axis of the measuring tool.

CenterFind mode is started at the laser receiver. For this, please read and observe the operating instructions for the laser receiver.

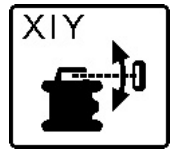

During the search, the **CenterFind** symbol for one or both axes will appear on the display of the measuring tool and the status indicator **(12)** will flash red.

If the laser beam was able to be aligned to the centre line of the laser receiver, the **CenterFind** mode will automatically finish and the slope found will be indicated on the start screen.

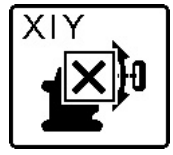

If the laser beam could not be aligned with the centre line of the laser receiver, the rotation of the laser beam is stopped and an error message appears in the display. Press any button to close the error message. The corresponding axis is levelled in again to 0 %.

Check whether the measuring tool and laser receiver have been set up correctly, and restart the mode. The laser receiver must be situated within the pivoting range of ±**8.5** % of the measuring tool.

Note: When using **CenterFind** mode, the setting of both axes can change, even if one of the axes has not been aligned with the laser receiver.

Mask mode (see figure C)

In rotational operation, the variable laser beam **(8)** can be switched off for one or more quadrants of the rotational plane. This makes it possible to limit the risk related to laser beams to certain areas. Interference from the laser beam that affects other tools or interference with the laser receiver by unintended reflections can also be avoided.

The switching off of individual quadrants can only be controlled by using the **Bosch Levelling Remote App**. The quadrants in which the laser beam is visible can be seen in the laser operating mode indicator **(a)** on the start screen.

Accuracy Check of the Measuring Tool

The following tasks should be performed only by well-trained and qualified persons. The legalities with regard to performing an accuracy check or calibration of a measuring tool must be known.

Influences on Accuracy

The largest influence is exerted by the ambient temperature. In particular, temperature differences that occur from the ground upwards can refract the laser beam.

In order to minimise thermal influences resulting from heat rising from the floor, it is recommended that you use the measuring tool on a tripod. In addition, position the measuring tool in the centre of the work surface, wherever this is possible.

In addition to external influences, device-specific influences (e.g. falls or heavy impacts) can also lead to deviations. For this reason, check the levelling accuracy each time before beginning work.

If the measuring tool exceeds the maximum deviation for the measuring procedures described below, perform a calibration (see "Calibrating the measuring tool", page 25) or have the measuring tool checked by a **Bosch** customer service agent.

Checking the levelling accuracy in a horizontal position

For a reliable and precise result, it is recommended that you check the levelling accuracy on a free measuring distance of **30** m on firm ground in front of a wall. Carry out a complete measuring procedure for each of the two axes.

– Mount the measuring tool in a horizontal position **30** m from the wall on a tripod, or place it on a firm, level surface. Switch on the measuring tool.

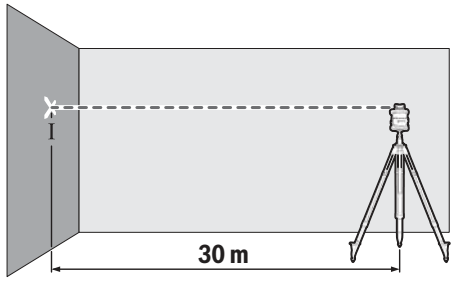

– Once levelling is complete, mark the centre of the laser beam on the wall (point **I**).

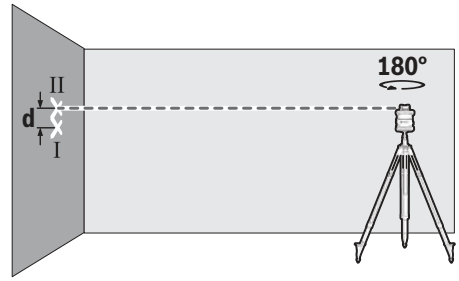

– Turn the measuring tool 180° without adjusting the height. Allow it to level in and mark the centre point of the laser beam on the wall (point **II**). Ensure that point **II** is vertically over or under point **I**.

Repeat the measuring process for the other axis. To do this, turn the measuring tool by 90° before beginning the measurement.

The maximum permitted deviation on the **30** m measuring distance is as follows: ±**1.5** mm. The discrepancy **d** between points **I** and **II** must therefore amount to no more than **3** mm for each of the two measuring processes.

Checking the levelling accuracy in the vertical position

For this check, you will need a free measuring distance on firm ground in front of a **10**-metre tall wall. Fix a plumb line to the wall.

– Position the measuring tool in the vertical position on a firm, level surface. Switch the measuring tool on and allow it to level in.

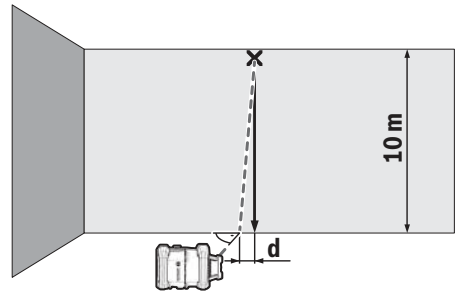

– Set up the measuring tool so that the laser beam meets the plumb line at the exact centre of the upper end. The discrepancy **d** between the laser beam and the plumb line at the lower end of the line reveals the measuring tool's deviation from the vertical.

For a **10** m high measuring distance, the maximum permitted deviation is as follows: ±**1** mm. The discrepancy **d** must therefore be no more than **1** mm.

Calibrating the measuring tool

The following tasks should be performed only by well-trained and qualified persons. The legalities with regard to performing an accuracy check or calibration of a measuring tool must be known.

- ▶ **Perform calibration of the measuring tool with extreme precision or have the measuring tool checked by a Bosch customer service agent.** Inaccurate calibration leads to incorrect measuring results.
- ▶ **Only start the calibration if you have to perform a calibration of the measuring tool.** As soon as the measuring tool is in calibration mode, you must perform the calibration meticulously to the end in order to ensure that no incorrect measuring results are produced afterwards.

Check the levelling accuracy after every calibration (see "Accuracy Check of the Measuring Tool", page 25). If the deviation is outside the maximum permitted limits, have the measuring tool checked by a **Bosch** customer service agent.

X-axis and Y-axis Calibration

The GRL 600 CHV can only be calibrated using the LR 60 laser receiver. The laser receiver must be connected to the measuring tool via *Bluetooth*® (see "Establishing a connection to the remote control/laser receiver", page 20).

The positions of the measuring tool and laser receiver cannot be changed during calibration (with the exception of the alignments or rotations described). Therefore position the measuring tool on a firm, level surface and secure the laser receiver.

Calibration should be performed via the **Bosch Levelling Remote App** if possible. There is less likelihood of error when controlling the tool via the app. Otherwise, the measuring tool's position can be altered if buttons are pressed without due care.

For calibration without the app, the corresponding buttons on the measuring tool must be pressed. It is not possible to use the remote control during calibration.

A free measuring distance of **30** m on a firm surface is required. If no such measuring distance is possible, calibration can also be performed with lower levelling accuracy on a measuring distance of **15** m.

Mounting the measuring tool and the laser receiver for calibration:

Mount the measuring tool in the horizontal position **30** m or **15** m from the laser receiver on the tripod **(43)** or position it on a firm, level surface.

Secure the laser receiver at the correct height:

- – Either to a wall or to another surface by means of magnets or the suspension hook on the laser receiver,
- – or to a securely fastened aid with the holder for the laser receiver.

To do this, consult the operating instructions for the laser receiver.

Aligning the measuring tool for calibration:

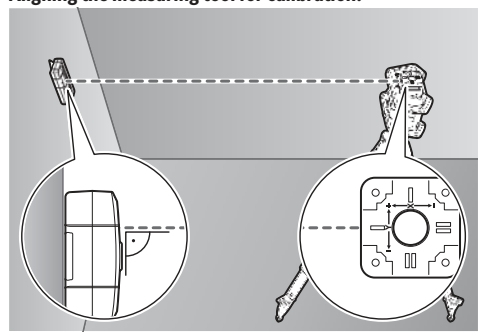

Align the measuring tool so that the X-axis indicator imprinted on the measuring tool with the **"+"** side is pointing to the laser receiver. For this, the X-axis must be perpendicular to the laser receiver.

To start calibration:

- – For calibration via the **Bosch Levelling Remote App**: Switch on the measuring tool. Start calibration in the app. Follow the instructions in the app.
- – For calibration without the app: Switch on the measuring tool and the laser receiver. Make sure that both of these are connected via *Bluetooth*®. Start calibration by pressing the on/off button on the laser receiver and the **CenterFind** mode button on the laser receiver at the same time. "**CAL**" will appear on the display of the laser receiver.

Press and hold the **CenterFind** mode button on the laser receiver to cancel the calibration, if required.

To perform calibration without the app:



In the menu that appears in the measuring tool display after starting calibration, select the existing distance between the measuring tool and the laser receiver. To do this, press the ▲ button **(4)** or the ▼ button **(3)**. Confirm your selection with ok by pressing the slope button **(14)**.



To confirm the selected measuring distance including the corresponding levelling accuracy (ok), press the slope button **(14)** in the menu which subsequently appears. To go back to selecting the measuring distance ( ), press the line operation button **(5)**.

Align the height of the laser receiver so that the variable laser beam **(8)** on the laser receiver is indicated as "centred" (see operating instructions for the laser receiver). Secure the laser receiver at this height.

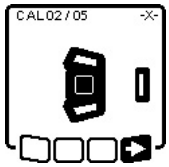

Check whether the measuring tool and laser receiver are aligned with each other, as illustrated on the display (the **"+"** side of the X-axis is aligned to the laser receiver). Start calibration of the X-axis with ➡ by pressing the slope button **(14)**.



If this step appears on the display, rotate the measuring tool 180° so that the **"–"** side of the X-axis is directed at the laser receiver. For each rotation, take care not to change the height and inclination of the measuring tool. Confirm the rotation with ➡ by pressing the slope button **(14)**. Calibration of the X-axis continues.



This symbol will appear on the measuring tool display if the X-axis has been successfully calibrated.

Continue calibration with ➡ by pressing the slope button **(14)**.

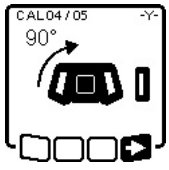

To calibrate the Y-axis, rotate the measuring tool 90° in the direction of the arrow so that the **"+"** side of the Y-axis is directed at the laser receiver. Confirm the rotation with ➡ by pressing the slope button **(14)**.

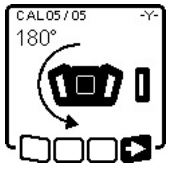

If this step appears on the display, rotate the measuring tool 180° so that the **"–"** side of the Y-axis is directed at the laser receiver. Confirm the rotation with ➡ by pressing the slope button **(14)**. Calibration of the Y-axis continues.



This symbol will appear on the measuring tool display if the Y-axis has been successfully calibrated.

Finish the calibration of the Y-axis with ➡ by pressing the slope button **(14)**.



This symbol confirms that the X-axis and the Y-axis have been successfully calibrated with the levelling accuracy selected at the beginning. End the calibration with ➡ by pressing the slope button **(14)**.

If the calibration has been completed successfully, the measuring tool then automatically switches itself off.





The relevant error message will appear in the measuring tool display if calibration of the X-axis or the Y-axis has not been successful. "**ERR**" will appear on the display of the laser receiver.

Cancel the calibration with ⬅ by pressing the button for line operation **(5)**.

Make sure that the measuring tool and the laser receiver are aligned correctly (see description above). Restart the calibration.

If calibration fails again, have the measuring tool checked by a **Bosch** customer service agent.

Z-axis calibration

A free measuring distance on firm ground in front of a **10** m wall is required for the calibration. Fix a plumb line to the wall.

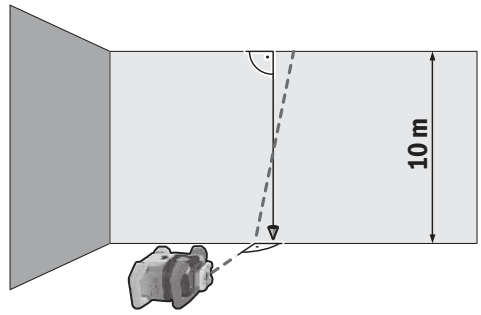

Position the measuring tool on a firm, level surface. Switch the measuring tool on and allow it to level in. Align the measuring tool so that the laser beam is perpendicular to the wall and cuts through the plumb line. Switch the measuring tool off.

To start calibration mode, press and hold the slope button **(14)** and then also briefly press the on/off button **(11)**. The measuring tool is switched on. Allow the measuring tool to level in.

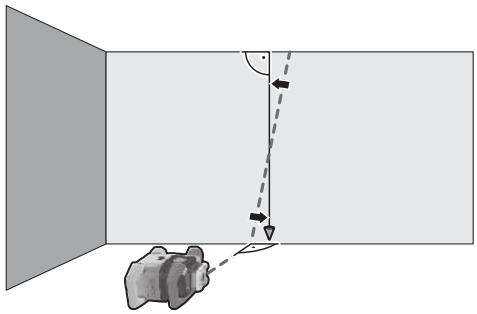

Align the laser beam so that it runs as parallel as possible to the plumb line.



Tilt the laser beam in the ◀ direction by pressing the ▲ button **(4)**. Tilt the laser beam in the ▶ direction by pressing the ▼ button **(3)**.

If it is not possible to align the laser beam in parallel to the plumb line, align the measuring tool to the wall more precisely and start the calibration process again.

If the laser beam is aligned in parallel, save the calibration with ok by pressing the slope button **(14)**.



This symbol confirms that the Z-axis has been calibrated successfully. At the same time, the status indicator **(12)** will flash green three times. End the calibration with ok by pressing the slope button **(14)**.

If the calibration has been completed successfully, the measuring tool then automatically switches itself off.



This error message will appear if calibration of the Z-axis has been unsuccessful. Cancel the calibration with ⇇ by pressing the button for line operation **(5)**.

Ensure that the reference vertical line is in the pivoting range of the rotation head and restart the calibration. Make sure that the measuring tool is not moved during calibration.

If calibration fails again, have the measuring tool checked by a **Bosch** customer service agent.

Working Advice

- ▶ **Only the centre of the laser point or laser line must be used for marking.** The size of the laser point/the width of the laser line changes depending on the distance.

Working with the Laser Target Plate

The laser target plate **(51)** improves visibility of the laser beam in unfavourable conditions and at greater distances.

The reflective surface of the laser target plate **(51)** improves visibility of the laser line. The transparent surface enables the laser line to be seen from behind the laser target plate.

Working with the Tripod (Accessory)

A tripod offers a stable, height-adjustable support surface for measuring. For horizontal operation, place the measuring tool with the 5/8" tripod mount **(18)** on the thread of the tripod **(43)**. Tighten the measuring tool using the locking screw of the tripod.

For vertical operation, use the 5/8" tripod mount **(20)**.

On a tripod featuring a measuring scale on its extender, you can set the height deviation straight away.

Roughly align the tripod before switching on the measuring tool.

Laser Goggles (Accessory)

The laser goggles filter out ambient light. This makes the light of the laser appear brighter to the eye.

- ▶ **Do not use the laser goggles (accessory) as protective goggles.** The laser goggles make the laser beam easier to see; they do not protect you against laser radiation.
- ▶ **Do not use the laser goggles (accessory) as sunglasses or while driving.** The laser goggles do not provide full UV protection and impair your ability to see colours.

Working with a wall mount and alignment unit (see figure D)

The measuring tool can be secured to the wall using the wall mount with the alignment unit **(44)**. Using the wall mount is recommended, e.g. when working above the maximum extension height of tripods, or when working on unstable surfaces without a tripod.

Fasten the wall mount **(44)** to a wall using screws through the fixing holes **(45)**. Fit the wall mount as vertical as possible and ensure it is mounted in a stable way.

Screw the 5/8" wall mount screw **(48)** into the horizontal tripod mount **(18)**, depending on the requirements of the task, or the vertical tripod mount **(20)** on the measuring tool.

Using the alignment unit allows the measuring tool to be moved in a range of approx. 13 cm with respect to height. Press the button **(46)** and move the alignment unit to roughly the required height. It is possible to align the laser beam precisely to a reference height using the fine adjustment screw **(47)**.

Working with the measuring rod (accessory) (see figure E)

To check levels or apply slopes, it is recommended to use the measuring rod **(42)** together with the laser receiver.

A relative measuring scale is incorporated at the top of the measuring rod **(42)**. You can preselect its zero at the bottom on the extender. This enables you to read deviations from the target height straight away.

Example applications

Projecting/checking heights (see figure F)

Position the measuring tool in the horizontal position on a firm support or mount it on a tripod **(43)** (accessory).

Working with a tripod: Set the laser beam at the required height. Project or check the height at the target location.

Working without a tripod: Determine the height difference between the laser beam and the height at the reference point using the laser target plate **(51)**. Project or check the height difference measured at the target location.

Parallel Alignment of Upwards Plumb Point/ Projecting Right Angles (see figure G)

When right angles are to be projected or partition walls are to be aligned, the upwards plumb point **(10)** must be aligned in parallel, meaning at the same distance to a reference line (e.g. a wall).

For this, set up the measuring tool in the vertical position and position it in such a manner that the upwards plumb point runs approximately parallel to the reference line.

For the exact positioning, measure the clearance between the upwards plumb point and reference line directly on the measuring tool using the laser target plate **(51)**. Measure the clearance between the upwards plumb point and reference line again as far away as possible from the measuring tool. Align the upwards plumb point in such a manner that it has the same clearance to the reference line as when measured directly at the measuring tool.

The right angle to the upwards plumb point **(10)** is indicated by the variable laser beam **(8)**.

Indicating a perpendicular/vertical plane (see figure G)

To indicate a perpendicular or a vertical plane, set up the measuring tool in the vertical position. When the vertical plane is supposed to run at a right angle to a reference line (e.g. a wall), align the upwards plumb point **(10)** with this reference line.

The perpendicular plane is indicated by the variable laser beam **(8)**.

Aligning a Perpendicular/Vertical plane (see figure H)

To align the vertical laser line or the rotational plane against a reference point on a wall, set up the measuring tool in the vertical position, and roughly align the laser line or the rotational plane with the reference point. For precise alignment with the reference point, turn the rotational plate around the X-axis (see "Turning the rotational plane when in the vertical position", page 22).

Working without the laser receiver

Under favourable light conditions (dark environment) and for short distances, it is possible to work without the laser receiver. For improved visibility of the laser beam, either select line operation or point operation and rotate the laser beam to the target location.

Working with the laser receiver (see figure E)

In unfavourable lighting conditions (bright environment, direct sunlight) and for larger distances, use the laser receiver to improve detection of the laser beam **(41)**. When working with the laser receiver, select rotational operation with the highest rotational speed.

Working outdoors (see figure E)

The laser receiver **(41)** should always be used when working outdoors.

When working on unstable ground, mount the measuring tool on the tripod **(43)**. Always work with the shock-warning function activated in order to avoid faulty measurements in case of ground movements or shocks to the measuring tool.

Setting up formwork (see figure I)

Mount the measuring tool in the horizontal position on a tripod **(43)** and set up the tripod outside the formwork area. Select rotational operation.

Secure the laser receiver **(41)** to a measuring rod **(42)** with the holder. Position the measuring rod on a reference point for the formwork.

Align the height of the laser receiver on the measuring rod so that the variable laser beam **(8)** of the measuring tool is indicated as "centred" (see operating instructions for the laser receiver).

Then position the measuring rod with the laser receiver, one after the other, at different test locations on the formwork. Make sure that the laser receiver remains in the same position on the measuring rod.

Correct the height of the formwork until the laser beam is indicated as "centred" at all test locations.

Checking slopes (see figure J)

Mount the measuring tool in the horizontal position on a tripod **(43)**. Select rotational operation.

Set up the tripod with the measuring tool so that the X-axis is aligned with the slope that is to be checked.

Set the target slope as the slope for the X-axis (see "Slope operation in the horizontal position", page 23).

Secure the laser receiver **(41)** to a measuring rod **(42)** with the holder. Place the measuring rod at the base of the slope surface.

Align the height of the laser receiver on the measuring rod so that the variable laser beam **(8)** of the measuring tool is indicated as "centred" (see operating instructions for the laser receiver).

Then position the measuring rod with the laser receiver, one after the other, at different test locations on the slope surface. Make sure that the laser receiver remains in the same position on the measuring rod.

If the slope of the plane is correct, the laser beam will be indicated as "centred" at all test locations.

Overview of status indicators

Measuring tool		Function
Green	Red	
○		Horizontal position: X- or Y-axis levelling process Vertical position: X-axis levelling process
○		Sleep mode activated
●		Horizontal position: Both axes are levelled. Vertical position: X-axis is levelled.
	○	Automatic shut-down due to error message (e.g. empty rechargeable/non-rechargeable battery, operating temperature exceeded)
	○	**CenterFind** mode started (see operating instructions for the laser receiver)
	○	Position of the measuring tool changed without switching on/off
	○	Self-levelling not possible, end of the self-levelling range
	○	Shock-warning function actuated
	○	Calibration of the measuring tool is started.
	●	Horizontal position: At least one axis is tilted or is in manual operating mode. Vertical position: X-axis is tilted or in manual operating mode.

● lighting up continuously

○ flashing

Remote control X		Remote control Y		Function
Green	Red	Green	Red	
○				X-axis levelling process (horizontal and vertical positions)
		○		Y-axis levelling process (horizontal position)
○		○		Remote control is being connected via *Bluetooth*®. (Both of the status indicators flash alternately.)
●				X-axis is levelled in (horizontal and vertical positions).
		●		Y-axis is levelled in (horizontal position).
● (3 s)		● (3 s)		Remote control successfully connected via *Bluetooth*®
	●			X-axis is tilted or in manual operating mode (horizontal and vertical positions).
			●	Y-axis is tilted or in manual operating mode (horizontal position).
	● (3 s)		● (3 s)	Unsuccessful connection to the measuring tool via *Bluetooth*®

● lighting up continuously

○ flashing

Overview of control options for the functions

Function	GRL 600 CHV	RC 6	LR 60	Bosch Levelling Remote App
Switching the GRL 600 CHV on and off	●	–	–	–
Establish connection via *Bluetooth*®[A)]	●	●	●	●
Sleep mode	●	●	–	●
Switching on the keyboard lock	–	–	–	●

Function	GRL 600 CHV	RC 6	LR 60	Bosch Levelling Remote App
Switching off the keyboard lock	●	–	–	●
Rotation, line and point operation	●	●	–	●
Turning the line/point within the rotational plane	●	●	–	●
Turning the rotational plane when in the vertical position	●	●	–	●
Automatic downwards plumb point function in the vertical position	–	●	–	●
Switching on/off the shock-warning function	●	–	–	●
Slope operation	●	●	–	●
Manual operation	●	–	–	●
CenterFind mode	–	–	●	–
Mask mode	–	–	–	●
X-axis and Y-axis calibration (horizontal position)[B]	●	–	●	●
Z-axis calibration (vertical position)	●	–	–	●

A) The function must be started on both the measuring tool and the remote control, laser receiver or smart phone at the same time.

B) The function must be started on both the measuring tool and the smartphone at the same time or on the laser receiver.

Rectifying errors

Rotary laser display indicator	Laser receiver display indicator	Problem	Corrective measure
	–	Automatic shut-down (empty rechargeable/non-rechargeable battery)	Change the rechargeable or non-rechargeable battery as necessary.
	–	Automatic shut-down (operating temperature exceeded)	Adjust the measuring tool to the ambient temperature before switching it on. Then check the measuring accuracy and calibrate the measuring tool if required.
	–/**PNK**	Unsuccessful attempt to connect to the remote control **(40)** or the laser receiver **(41)**	Briefly press the on/off button **(11)** to close the error message. Start the connection process again (see "Establishing a connection to the remote control/laser receiver", page 20). If it is not possible to establish a connection, please contact a **Bosch** customer service agent.
	–	Unsuccessful attempt to connect to the mobile device	Briefly press the on/off button **(11)** to close the error message. Start the connection process again (see "Remote control via **Bosch Levelling Remote App**", page 20). If it is not possible to establish a connection, please contact a **Bosch** customer service agent.
	–	Measuring tool is at a slant of more than 8.5 % or is not in the correct horizontal or vertical position.	Reposition the measuring tool so that it is in either the horizontal or vertical position. The re-levelling will start automatically.
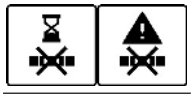	–	Maximum levelling time is exceeded	Reposition the measuring tool so that it is in either the horizontal or vertical position. Briefly press the on/off button **(11)** to restart levelling.

Rotary laser display indicator	Laser receiver display indicator	Problem	Corrective measure
	–	Change between the horizontal and vertical position without switching the measuring tool on/off	Briefly press the on/off button **(11)** to restart levelling.
	**ERR**	Unsuccessful calibration of the X-axis	Cancel the calibration with ⇇ by pressing the button for line operation **(5)**. Ensure that the receiving field of the laser receiver is perpendicular to the corresponding axis (X/Y) of the measuring tool. Restart the calibration.
	**ERR**	Unsuccessful calibration of the Y-axis	
	–	Unsuccessful calibration of the Z-axis	Cancel the calibration with ⇇ by pressing the button for line operation **(5)**. Check that the measuring tool is aligned correctly and restart calibration.
	**ERR**	Unsuccessful **CenterFind** mode in relation to the X-axis	Press any button to close the error message. Check whether the measuring tool and laser receiver have been set up correctly. The laser receiver must be situated within the pivoting range of ±**8.5** % of the measuring tool. Restart the mode.
	**ERR**	Unsuccessful **CenterFind** mode in relation to the Y-axis	

Maintenance and Service

Maintenance and Cleaning

Keep the measuring tool and the remote control clean at all times.

Do not immerse the measuring tool and remote control into water or other fluids.

Wipe off any dirt using a damp, soft cloth. Do not use any detergents or solvents.

In particular, regularly clean the surfaces at the outlet aperture of the laser on the measuring tool and make sure to check for any lint.

Only store and transport the measuring tool in the case **(53)**.

If the measuring tool needs to be repaired, send it off in the case **(53)**.

When transporting the measuring tool in the case **(53)**, the tripod **(43)** can be secured to the case with the strap **(52)**.

After-Sales Service and Application Service

Our after-sales service responds to your questions concerning maintenance and repair of your product as well as spare parts. You can find explosion drawings and information on spare parts at: **www.bosch-pt.com**

The Bosch product use advice team will be happy to help you with any questions about our products and their accessories.

In all correspondence and spare parts orders, please always include the 10-digit article number given on the nameplate of the product.

India

Bosch Service Center
69, Habibullah Road, (Next to PSBB School), T. Nagar
Chennai – 600077
Phone: (044) 64561816

Bosch Service Center
18, Community Center
Phase 1, Mayapuri
New Delhi – 110064
Phone: (011) 43166190

Bosch Service Center
Shop no 7&8, Aspen garden
Walbhat road , Goregaon (E)
Near to Ram Mandir Railway Station
Mumbai – 400063
Mobile: 09819952950

Malaysia

Robert Bosch Sdn. Bhd.(220975-V) PT/SMY
No. 8A, Jalan 13/6
46200 Petaling Jaya
Selangor
Tel.: (03) 79663194

Toll-Free: 1800 880188
Fax: (03) 79583838
E-Mail: kiathoe.chong@my.bosch.com
www.bosch-pt.com.my

Israel
Ledico Ltd.
31 Lazrov Street
P.O. Box 6018 Rishon Le Ziyon
service@ledico.com

Korea
Tel.: 080-955-0909 (Hotline)

You can find further service addresses at:

www.bosch-pt.com/serviceaddresses

Transport

The contained lithium-ion batteries are subject to the Dangerous Goods Legislation requirements. The batteries are suitable for road-transport by the user without further restrictions.

When shipping by third parties (e.g.: by air transport or forwarding agency), special requirements on packaging and labelling must be observed. For preparation of the item being shipped, consulting an expert for hazardous material is required.

Dispatch battery packs only when the housing is undamaged. Tape or mask off open contacts and pack up the battery in such a manner that it cannot move around in the packaging. Please also observe the possibility of more detailed national regulations.

Disposal



Electrical and electronic equipment, batteries, accessories and packaging should be sorted for environmentally friendly recycling.



Do not dispose of electrical and electronic equipment and batteries in the household waste!

Battery packs/batteries:

Li-ion:

Please observe the notes in the section on transport (see "Transport", page 33).

LR 60

Safety Instructions



All instructions must be read and observed. The safeguards integrated into the measuring tool may be compromised if the measuring tool is not used in accordance with these instructions. STORE THESE INSTRUCTIONS IN A SAFE PLACE.

- ▶ **Have the measuring tool serviced only by a qualified specialist using only original replacement parts.** This will ensure that the safety of the measuring tool is maintained.
- ▶ **Do not use the measuring tool in explosive atmospheres which contain flammable liquids, gases or dust.** Sparks may be produced inside the measuring tool, which can ignite dust or fumes.
- ▶ **When operating the measuring tool, loud signal tones may sound under certain circumstances. For this reason, keep the measuring tool away from your ears and from other persons.** The loud sound can damage hearing.



Keep the magnet away from implants and other medical devices, e.g. pacemakers or insulin pumps. The magnet generates a field that can impair the function of implants and medical devices.

- ▶ **Keep the measuring tool away from magnetic storage media and magnetically-sensitive devices.** The effect of the magnets can lead to irreversible data loss.
- ▶ **The measuring tool is equipped with a wireless interface. Local operating restrictions, e.g. in aeroplanes or hospitals, must be observed.**

The *Bluetooth*® word mark and logos are registered trademarks owned by Bluetooth SIG, Inc. and any use of such marks by Robert Bosch Power Tools GmbH is under license.

- ▶ **Caution! When using the measuring tool with *Bluetooth*®, a fault may occur in other devices and systems, aeroplanes and medical devices (e.g. pacemakers, hearing aids). Also, damage to people and animals in the immediate vicinity cannot be completely excluded. Do not use the measuring tool with *Bluetooth*® in the vicinity of medical devices, petrol stations, chemical plants, areas with a potentially explosive atmosphere and in blasting areas. Do not use the measuring tool with *Bluetooth*® on aeroplanes. Avoid using the product near your body for extended periods.**

Product Description and Specifications

Please observe the illustrations at the beginning of this operating manual.

Intended Use

The laser receiver is intended to quickly find rotating laser beams of the wavelength specified in the technical data.

The laser receiver is also intended for controlling the **GRL 600 CHV** via *Bluetooth*®.

The laser receiver is suitable for indoor and outdoor use.

Product Features

The numbering of the product features refers to the illustration of the laser receiver on the graphics page.

- **(54)** Laser beam reception area
- **(55)** "Laser beam above centre line" LED direction indicator
- **(56)** LED for centre line
- **(57)** "Laser beam below centre line" LED direction indicator
- **(58)** Display (front and back)
- **(59)** Speaker
- **(60)** Spirit level
- **(61)** Utility hook
- **(62)** Centre mark
- **(63)** Magnets
- **(64)** Mount for holder
- **(65)** Serial number
- **(66)** Battery compartment cover
- **(67)** Battery compartment cover locking mechanism
- **(68)** Y-axis button
- **(69)** X-axis button
- **(70)** Mode button **CenterFind**
- **(71)** Button for adjusting the reception accuracy
- **(72)** On/off button
- **(73)** Audio signal/volume button
- **(74)** Spirit level for holder[a)]
- **(75)** Centre line reference on the holder[a)]
- **(76)** Holder[a)]
- **(77)** Rotary knob of holder[a)]
- **(78)** Measuring rod[a)]

(79) Fastening screw of the holder[a)]

a) **Accessories shown or described are not included with the product as standard. You can find the complete selection of accessories in our accessories range.**

Display Elements

(i) Battery pack/battery charge indicator for rotary laser

(j) *Bluetooth*® connection indicator

(k) Indicator for reception accuracy

(l) Unit of measurement indicator

(m) Text indicator

(n) "Laser beam below centre line" direction indicator

(o) Indicator for audio signal/volume

(p) Centre line indicator

(q) Battery indicator for laser receiver

(r) "Laser beam over centre line" direction indicator

Technical Data

Laser receiver	LR 60
Article number	**3 601 K69 P..**
Receivable wavelength	600–800 nm
Max. work area[A)]	300 m
Reception angle	±35°
Receivable rotation speed	> 120 min^{-1}
Reception accuracy[B)C)]	
– Very fine	±0.5 mm
– Fine	±1 mm
– Medium	±2 mm
– Coarse	±5 mm
– Very coarse	±10 mm
Operating temperature	–10 °C to +50 °C
Storage temperature	–20 °C to +70 °C
Max. altitude	2000 m
Relative air humidity max.	90 %
Pollution degree according to IEC 61010-1	2[D)]
Bluetooth® laser receiver	
– Class	1
– Compatibility	*Bluetooth*® 5.0/4.X (Low Energy)[E)]
– Max. signal range[F)]	100 m
– Operating frequency range	2402–2480 MHz
– Max. transmission power	6.3 mW
Batteries	2 × 1.5 V LR6 (AA)
Approx. operating time	50 h
Weight according to EPTA-Procedure 01:2014	0.38 kg
Dimensions (length × width × height)	175 × 79 × 33 mm
Protection rating	IP67

A) The working range may be reduced by unfavourable environmental conditions (e.g. direct sunlight).

B) Dependent on the distance between the laser receiver and the rotary laser and on the laser class and laser type of the rotary laser

C) The reception accuracy may be reduced by unfavourable environmental conditions (e.g. direct sunlight).

D) Only non-conductive deposits occur, whereby occasional temporary conductivity caused by condensation is expected.

E) When using *Bluetooth*® Low Energy devices, it may not be possible to establish a connection depending on the model and operating system. *Bluetooth*® devices must support the SPP profile.

F) The signal range may vary greatly depending on external conditions, including the receiving device used. The *Bluetooth*® range may be significantly weaker inside closed rooms and through metallic barriers (e.g. walls, shelving units, cases, etc.).

For clear identification of your laser receiver, see the serial number **(65)** on the type plate.

Assembly

Inserting/Changing the Batteries

Alkali-manganese batteries are recommended for the laser receiver.

Turn the locking mechanism **(67)** of the battery compartment cover into position (e.g. using a coin). Open the battery compartment cover **(66)** and insert the batteries.

When inserting the batteries, ensure that the polarity is correct according to the illustration on the inside of the battery compartment.

Close the battery compartment cover **(66)** and turn the locking mechanism **(67)** of the battery compartment cover into position .

The battery indicator **(q)** shows the state of charge of the batteries of the laser receiver:

Indicator	Capacity
	50 – 100%
	5 – 50%
	2 – 5%
	0 – 2%

Always replace all the batteries at the same time. Only use batteries from the same manufacturer and which have the same capacity.

- ▶ **Take the batteries out of the laser receiver when you are not using it for a prolonged period of time.** The batteries can corrode and self-discharge during prolonged storage in the laser receiver.

Rotary Laser Battery Charge Indicator

The battery charge indicator **(i)** shows the state of charge of the battery pack/batteries of the rotary laser, provided that the rotary laser is switched on and a *Bluetooth*® connection has been established between the laser receiver and the rotary laser.

Indicator	Capacity
	60 – 100%
	30 – 60%
	5 – 30%
	0 – 5%

Operation

Starting operation

- ▶ **Protect the laser receiver against moisture and direct sunlight.**
- ▶ **Do not subject the laser receiver to extreme temperatures or variations in temperature.** As an example, do not leave it in vehicles for longer periods. In case of large variations in temperature, allow the laser receiver to adjust to the ambient temperature before putting it into operation. In case of extreme temperatures or variations in temperature, the accuracy of the laser receiver can be impaired.
- ▶ **Keep the work area free from obstacles that could reflect or obstruct the laser beam. For example, cover any reflective or shiny surfaces. Do not measure through panes of glass or similar materials.** The measurements may be distorted by a reflected or obstructed laser beam.

Setting up the laser receiver (see figure K)

Position the laser receiver so that the laser beam can reach the reception area **(54)**. Align it so that the laser beam runs straight through the reception area (as shown in the figure).

For rotary lasers with multiple operating modes, select the horizontal or vertical operation with the highest rotational speed.

Switching On/Off

- ▶ **A loud audio signal sounds when switching on the laser receiver. Therefore, keep the laser receiver away from your ear or other persons when switching it on.** The loud sound can damage hearing.

To **switch on** the laser receiver, press the on/off button **(72)**. All display indicators and all LEDs light up briefly and an audio signal sounds.

To **switch off** the laser receiver, press and hold the on/off button **(72)** until all LEDs briefly light up and the display goes out. With the exception of the setting for the display lighting, all settings are saved when the laser receiver is switched off.

If no button on the laser receiver is pressed for approx. **10** min and no laser beam reaches the reception area **(54)** for **10** min, then the laser receiver will automatically switch itself off to preserve battery life.

Connection to the Rotary Laser

In the default factory setting, the rotary laser and the supplied laser receiver are already connected via *Bluetooth*®. For the existing connection, the *Bluetooth*® connection indicator **(j)** appears in the display of the laser receiver.

To reconnect the laser receiver or to connect an additional laser receiver with the rotary laser, press and hold the *Bluetooth*® button on the rotary laser until the symbol for establishing a connection to the remote control/laser receiver appears in the display of the rotary laser. Then press and hold the X-axis button **(69)** and Y-axis button **(68)** on the laser receiver until **P--** appears in the text display **(m)**.

Confirmation as to whether a connection has successfully been established will be shown on the display of the rotary laser. **POK** will appear on the text indicator **(m)** of the laser receiver.

If the connection between the rotary laser and the laser receiver cannot be established, **PNK** will appear in the text display **(m)** of the laser receiver and the error message for a failed connection will be shown in the display of the rotary laser. For troubleshooting, consult the operating instructions for the rotary laser.

Direction indicators

The position of the laser beam in the reception area **(54)** is indicated as follows:

- – On the display **(58)** on the front and rear of the laser receiver by means of the "laser beam below centre line" direction indicator **(n)**, the "laser beam above centre line" direction indicator **(r)** and the centre line indicator **(p)**
- – Optionally, by means of the red "laser beam below centre line" LED direction indicator **(57)**, the blue "laser beam above centre line" LED direction indicator **(55)** and the green centre line LED **(56)** on the front of the laser receiver
- – By an audio signal (optional).

On the first pass of the laser beam through the reception area **(54)** a short audio signal always sounds and the red "laser beam below centre line" LED direction indicator **(57)** and the blue "laser beam above centre line" LED direction indicator **(55)** briefly light up (even if the audio signal and/or LED direction indicators have been switched off).

Laser receiver too low: If the laser beam hits the upper half of the reception area **(54)**, then the "laser beam above centre line" direction indicator **(r)** appears in the display. If the LEDs are switched on, the blue "laser beam above centre line" LED direction indicator **(55)** lights up. If the audio signal is switched on, a signal sounds in a slow

rhythm.
Move the laser receiver upwards in the direction of the arrow. When the laser beam is close to the centre line, only the tip of the "laser beam above centre line" direction indicator **(r)** is shown.

Laser receiver too high: If the laser beam hits the lower half of the reception area **(54)**, then the "laser beam below centre line" direction indicator **(n)** appears in the display.
If the LEDs are switched on, the red "laser beam below centre line" LED direction indicator **(57)** lights up.
If the audio signal is switched on, a signal sounds in a fast rhythm.
Move the laser receiver downwards in the direction of the arrow. When the laser beam is close to the centre line, only the tip of the "laser beam below centre line" direction indicator **(n)** is shown.

Laser receiver centred: If the laser beam hits the reception area **(54)** at the height of the centre line, then the centre line indicator **(p)** appears in the display.
If the LEDs are switched on, the green centre line LED **(56)** lights up.
If the audio signal is switched on, a continuous tone sounds.

Memory function of last reception: If the laser receiver is moved so that the laser beam leaves the reception area **(54)** again, the last displayed direction indicator for "laser beam above centre line" **(r)** or "laser beam below centre line" **(n)** flashes for a short time. This indicator can be switched on or off via the settings menu.

Relative height indicator (see figure L)

If the laser beam hits the reception area **(54)**, the clearance between the laser beam and the centre line of the laser receiver is shown in the text display **(m)** as an absolute value.

The measuring unit for the height indicator can be changed in the settings menu ("mm" or "in").

Display illumination

The displays **(58)** on the front and rear of the laser receiver can be illuminated. The display illumination function is switched on:

- When the laser receiver is switched on
- With each press of a button
- If the laser beam moves over the reception area **(54)**.

The display illumination function automatically switches off:

- 30 s after each button press, if no laser beam reaches the reception area
- 2 min after the last button press and if the position of the laser beam in the reception area does not change.

The display illumination can be switched off in the settings menu.

The setting for display illumination is not saved when the laser receiver is switched off. After switching on the laser receiver, the display illumination is always switched on.

Settings

Selecting the setting of the centre line indicator

You can specify the accuracy with which the position of the laser beam is indicated as "centred" on the reception area **(54)**.

The current setting for the centre line indicator **(k)** can be seen in the indicator for reception accuracy.

To change the reception accuracy, press the button for adjusting the reception accuracy **(71)** as many times as needed for the required setting to be shown in the display. With each press of the button for adjusting the reception accuracy, the respective value for the reception accuracy appears in the text display **(m)** for a short time.

The setting for reception accuracy is saved when the tool is switched off.

Laser Beam Indicator Audio Signal

The position of the laser beam on the reception area **(54)** can also be indicated by an audio signal.

The volume level can be changed or the audio signal switched off.

To change the volume level or switch off the audio signal, push the audio signal button **(73)** until the required volume level is indicated on the display. At a low volume, the audio signal indicator **(o)** appears on the display with one bar; at a high volume, the indicator appears with three bars. When the audio signal is switched off, the indicator goes out.

Independent of the audio signal setting, a short beep sounds at low volume level when the laser beam first makes contact with the reception area **(54)**.

The setting for the audio signal is saved when the laser receiver is switched off.

Settings menu

To call up the settings menu: Briefly press the X-axis button **(69)** and the Y-axis button **(68)** on the laser receiver at the same time.

To change the setting within a submenu: Press the X-axis button **(69)** or the Y-axis button **(68)** to switch between the settings. The last selected setting is automatically saved when exiting the menu.

To change the submenu: Briefly press the **CenterFind** mode button **(70)** to move to the next submenu.

To exit the settings menu: Press and hold the **CenterFind** mode button **(70)** until the settings menu closes. Alternatively, the settings menu is automatically closed approximately 10 seconds after the last press of a button.

The following submenus are available:

- **Unit of measurement of the relative height indicator:** When calling up the unit of measurement menu, the currently selected unit of measurement is shown in the text display **(m)**, while the available units of measurement are shown in the unit of measurement indicator **(l)** above it.
- **LED direction indicators (LED):** The 3 LED direction indicators **(55)**, **(57)** and **(56)** can be adjusted with re-

gard to their brightness or switched off. The LEDs light up in their selected setting.
- **Display lighting (LIT):** The display lighting can be switched on (green LED lights up) or switched off (red LED lights up).
- **Memory function for last reception (MEM):** The indicator for the direction in which the laser beam has left the reception area can be switched on (green LED lights up) or switched off (red LED lights up).

With the exception of the setting for the display lighting, all settings are saved when the laser receiver is switched off.

Functions

CenterFind mode (see figure M)

In **CenterFind** mode, the rotary laser automatically attempts to align the laser beam to the centre line of the laser receiver by moving the rotation head up and down.

If the rotary laser is in the **horizontal position**, the laser beam can be aligned in relation to the X-axis of the rotary laser, to the Y-axis or to both axes at the same time (see "Inclination determination with **CenterFind** mode (see figure **N**)", page 38). If the rotary laser is in the **vertical position**, only alignment to the Y-axis is possible.

Start CenterFind mode:

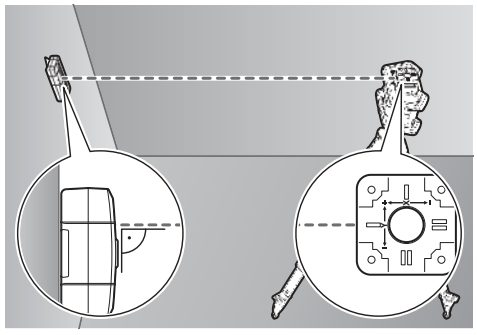

Position the rotary laser and laser receiver so that the laser receiver is situated in the direction of the X-axis or the Y-axis of the rotary laser. Align the laser receiver so that the required axis is at a right angle to the reception area **(54)**.

If the laser beam is aligned to both axes, then place a laser receiver connected to the rotary laser in the direction of the X- and Y-axis respectively. Each laser receiver must be situated within the pivoting range of ±8.5 % of the rotary laser.

Switch on the rotary laser in rotational operation.

To **start** the **CenterFind** mode for the **X-axis**, either press and hold the **CenterFind (70)** mode button, or press and hold the **CenterFind (70)** mode button, together with the X-axis button **(69)**.

To start the **CenterFind** mode for the **Y-axis**, press and hold the **CenterFind (70)** mode button, together with the Y-axis button **(68)**.

Should the laser beam be aligned to both axes at the same time, **CenterFind** mode must be started separately on each laser receiver.

Following the start of **CenterFind** mode, the rotary head on the rotary laser moves up and down. During the search process, **CFX** (X-axis) or **CFY** (Y-axis) appears in the text display **(m)**.

If the laser beam hits the reception area **(54)** at the height of the centre line of the laser receiver, the centre line indicator **(p)** will appear and **XOK** (X axis) and **YOK** (Y axis) will appear in the text display **(m)**. The value of the incline that is found is displayed on the rotary laser. **CenterFind** mode will be ended automatically.

Cancelling CenterFind mode:
To cancel the **CenterFind** mode, press and hold the **CenterFind** mode button **(70)**.

Troubleshooting:
If the laser beam was unable to find the centre line of the laser receiver within the pivoting range, **ERR** appears in the text display **(m)** and all LED direction indicators light up. Press any button on the rotary laser and one on the laser receiver to close the error messages. Reposition the rotary laser and laser receiver so that the laser receiver is situated within the pivoting range of ±8.5 % of the rotary laser. Ensure that the laser receiver is aligned to the X-axis or Y-axis so that the laser beam can pass through the reception area **(54)** horizontally. Then restart the **CenterFind** mode.

Inclination determination with CenterFind mode (see figure N)

Using **CenterFind** mode, the inclination of a surface can be measured up to max. 8.5 %. To do this, set up the rotary laser at one end of the inclined surface in a horizontal position on a tripod. The X- or Y-axis of the rotary laser must be aligned with the inclination to be determined. Switch on the rotary laser and allow it to level in.

Secure the laser receiver to a measuring rod **(78)** with the holder. Place the measuring rod near to the measuring tool (at the same end of the inclined surface). Align the height of the laser receiver on the measuring rod so that the laser beam of the rotary laser is indicated as "centred" ❶.

Then place the measuring rod with the laser receiver at the other end of the inclined surface at ❷. Ensure that the position of the laser receiver on the measuring rod remains unchanged.

Start **CenterFind** mode for the axis to which the inclined surface is aligned. At the end of **CenterFind** mode, the inclination of the surface is shown on the rotary laser.

Anti-strobe protection filter

The laser receiver has electronic filters for strobe light. The filters protect against, for example, interference from the warning lights of construction machinery.

Working Advice

Aligning with the spirit level

The laser receiver can be aligned vertically (plumb line) with the spirit level **(60)**. If a laser receiver is mounted at an angle, it will give incorrect measurements.

Marking

You can mark the position of the laser beam at the centre mark **(62)** on the left and right of the laser receiver when the beam hits the centre of the reception area **(54)**.

When marking, take care to align the laser receiver so that it is exactly vertical (with a horizontal laser beam) or horizontal (with a vertical laser beam), as otherwise the marks are offset with respect to the laser beam.

Attaching using the holder (see figure O)

You can use the holder **(76)** to attach the laser receiver to a measuring rod **(78)** (accessory) as well as to other auxiliary tools with a width of up to **65** mm.

Screw the holder **(76)** to the mount **(64)** on the rear side of the laser receiver with the fastening screw **(79)**.

Loosen the rotary knob **(77)** on the holder, slide the holder onto the measuring rod **(78)** and retighten the rotary knob **(77)**.

You can use the spirit level **(74)** to ensure that the holder **(76)** is horizontally aligned along with the laser receiver. If the laser receiver is mounted at an angle, it will give incorrect measurements.

The centre line reference **(75)** on the holder is situated at the same height as the centre marking **(62)** and can be used for marking the laser beam.

Attaching using a magnet (see figure P)

If an attachment is not required to be especially secure, the laser receiver can be attached to steel parts using the magnets **(63)**.

Rectifying errors

Text display (m)	Problem	Corrective measures
PNK	Failed to establish *Bluetooth*® connection to the GRL 600 CHV rotary laser	Briefly press the on/off button on the rotary laser to close the error message. Restart the process for establishing the connection. If it is not possible to establish a connection, please contact a **Bosch** customer service agent.
ERR	Calibration of the GRL 600 CHV rotary laser failed	Read and observe the operating instructions for the GRL 600 CHV.
	CenterFind mode failed	Press any button to close the error message. Check the position of the rotary laser and laser receiver before restarting the function.

Assignment of Functions

Function possible with LR 60 and	GRL 600 CHV	Rotary laser with red laser beam (600–800 nm)
Battery charge indicator of the rotary laser	●	–
Direction indicators for the position of the laser beam	●	●
Relative height indicator	●	●
CenterFind mode	●	–

Maintenance and Service

Maintenance and Cleaning

Always keep the laser receiver clean.

Do not immerse the laser receiver in water or other liquids.

Wipe off any dirt using a damp, soft cloth. Do not use any detergents or solvents.

After-Sales Service and Application Service

Our after-sales service responds to your questions concerning maintenance and repair of your product as well as spare parts. You can find explosion drawings and information on spare parts at: **www.bosch-pt.com**

The Bosch product use advice team will be happy to help you with any questions about our products and their accessories.

In all correspondence and spare parts orders, please always include the 10-digit article number given on the nameplate of the product.

India
Bosch Service Center
69, Habibullah Road, (Next to PSBB School), T. Nagar
Chennai – 600077
Phone: (044) 64561816

Bosch Service Center
18, Community Center
Phase 1, Mayapuri
New Delhi – 110064
Phone: (011) 43166190

Bosch Service Center
Shop no 7&8, Aspen garden
Walbhat road , Goregaon (E)
Near to Ram Mandir Railway Station
Mumbai – 400063
Mobile: 09819952950

Malaysia
Robert Bosch Sdn. Bhd.(220975-V) PT/SMY
No. 8A, Jalan 13/6
46200 Petaling Jaya
Selangor
Tel.: (03) 79663194
Toll-Free: 1800 880188
Fax: (03) 79583838
E-Mail: kiathoe.chong@my.bosch.com
www.bosch-pt.com.my

Israel
Ledico Ltd.
31 Lazrov Street
P.O. Box 6018 Rishon Le Ziyon
service@ledico.com

Korea
Tel.: 080-955-0909 (Hotline)

You can find further service addresses at:

www.bosch-pt.com/serviceaddresses

Disposal

The laser receiver, accessories and packaging should be recycled in an environmentally friendly manner.



Do not dispose of laser receivers or batteries with household waste.

Only for EU countries:

According to the Directive 2012/19/EU, laser receivers that are no longer usable, and according to the Directive 2006/66/EC, defective or used battery packs/batteries, must be collected separately and recycled in an environmentally friendly manner.

Licenses

Copyright © 2009–2020 ARM LIMITED
All rights reserved.
Redistribution and use in source and binary forms, with or without modification, are permitted provided that the following conditions are met:

- Redistributions of source code must retain the above copyright notice, this list of conditions and the following disclaimer.
- Redistributions in binary form must reproduce the above copyright notice, this list of conditions and the following disclaimer in the documentation and/or other materials provided with the distribution.
- Neither the name of ARM nor the names of its contributors may be used to endorse or promote products derived from this software without specific prior written permission.

THIS SOFTWARE IS PROVIDED BY THE COPYRIGHT HOLDERS AND CONTRIBUTORS "AS IS" AND ANY EXPRESS OR IMPLIED WARRANTIES, INCLUDING, BUT NOT LIMITED TO, THE IMPLIED WARRANTIES OF MERCHANTABILITY AND FITNESS FOR A PARTICULAR PURPOSE ARE DISCLAIMED. IN NO EVENT SHALL THE COPYRIGHT OWNER OR CONTRIBUTORS BE LIABLE FOR ANY DIRECT, INDIRECT, INCIDENTAL, SPECIAL, EXEMPLARY, OR CONSEQUENTIAL DAMAGES (INCLUDING, BUT NOT LIMITED TO, PROCUREMENT OF SUBSTITUTE GOODS OR SERVICES; LOSS OF USE, DATA, OR PROFITS; OR BUSINESS INTERRUPTION) HOWEVER CAUSED AND ON ANY THEORY OF LIABILITY, WHETHER IN CONTRACT, STRICT LIABILITY, OR TORT (INCLUDING NEGLIGENCE OR OTHERWISE) ARISING IN ANY WAY OUT OF THE USE OF THIS SOFTWARE, EVEN IF ADVISED OF THE POSSIBILITY OF SUCH DAMAGE.