Nothing but **HEAVY DUTY.®**



M18 FBS85

Original instructions

20 Text section with Technical Data, important Safety and Working Hints and description of Symbols



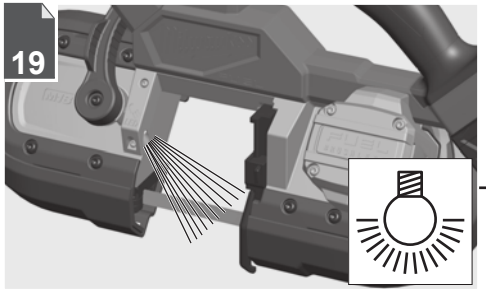

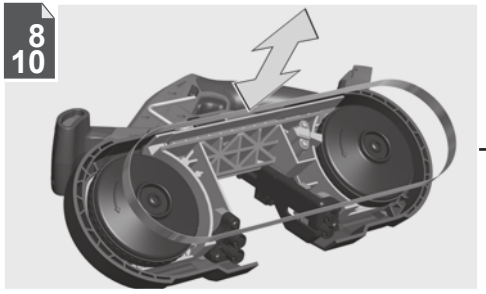

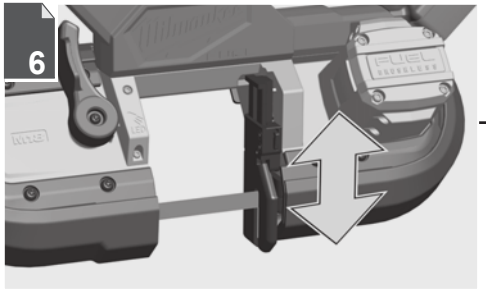

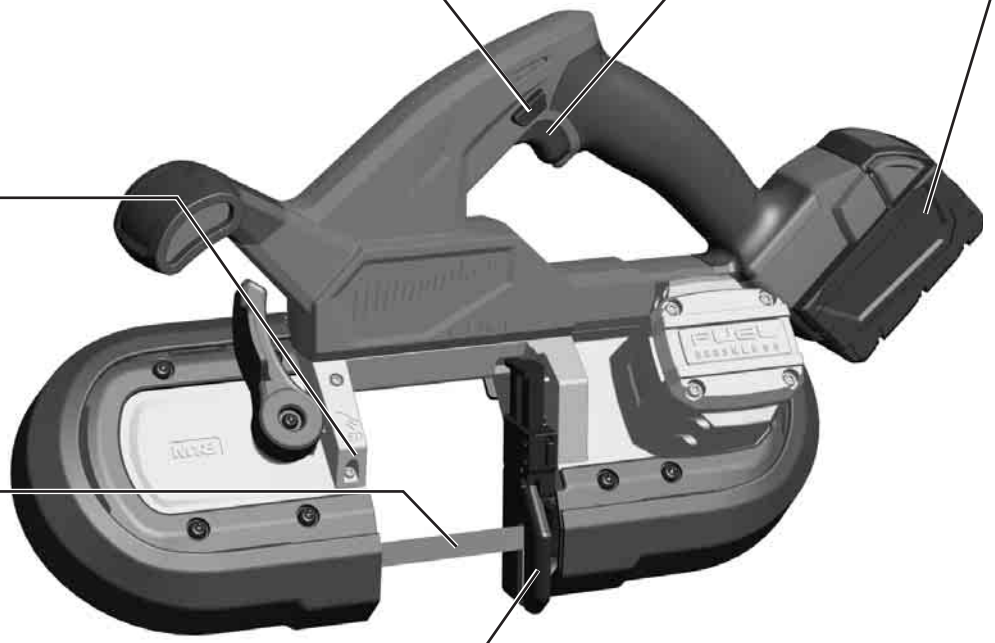

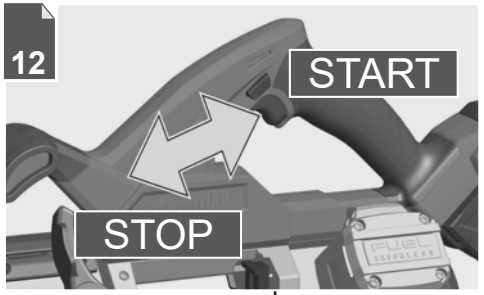

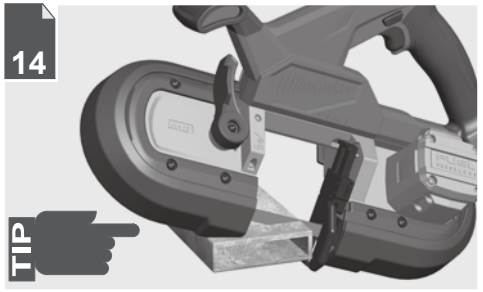

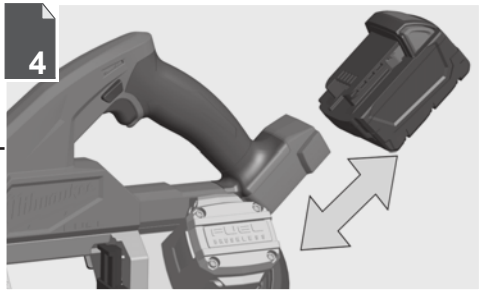



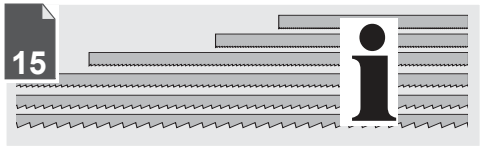



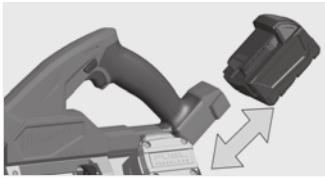



Remove the battery pack before starting any work on the machine.

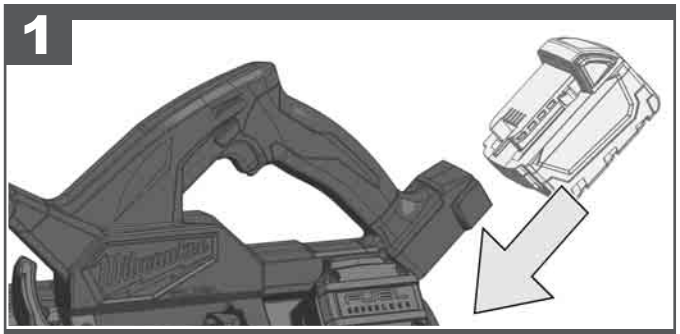

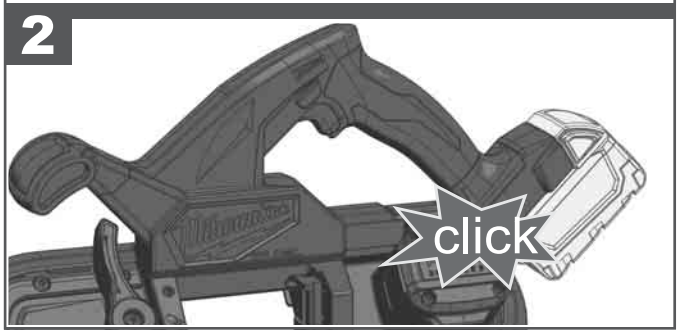

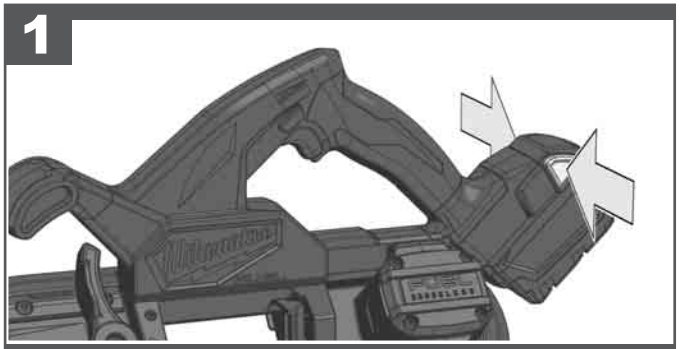

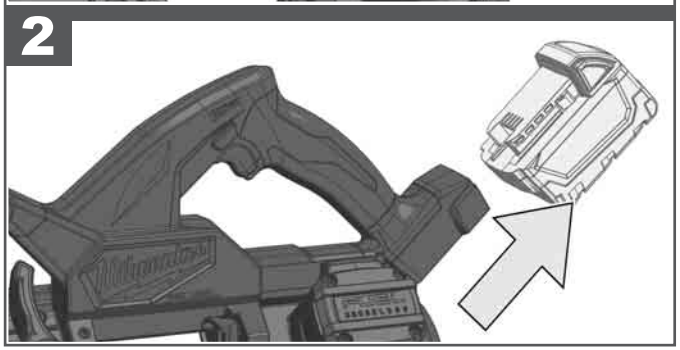

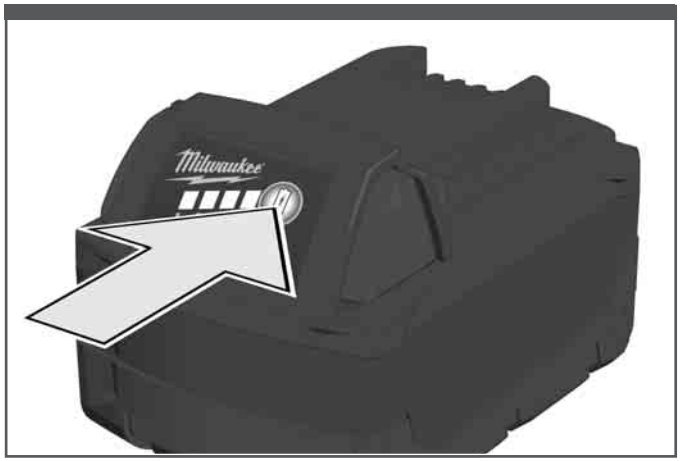



78-100 %



55-77 %



33-54 %



10-32 %



< 10 %



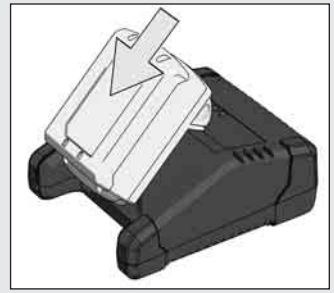

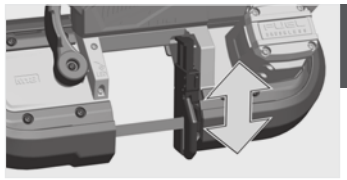

1

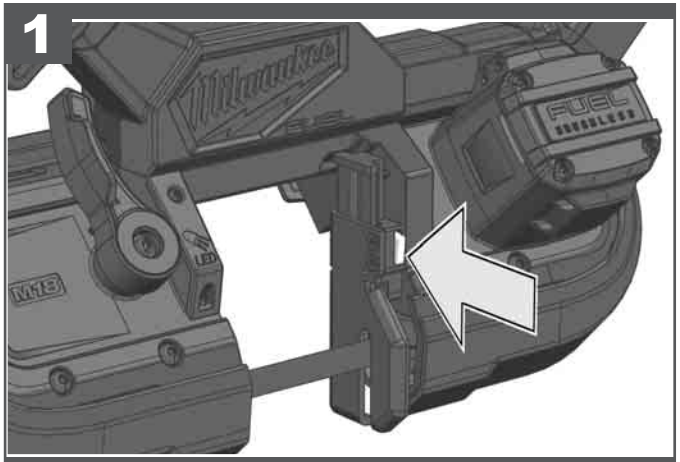

2

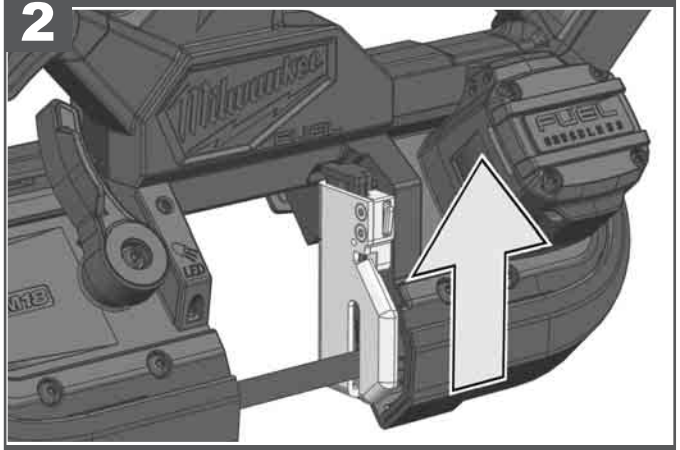

3

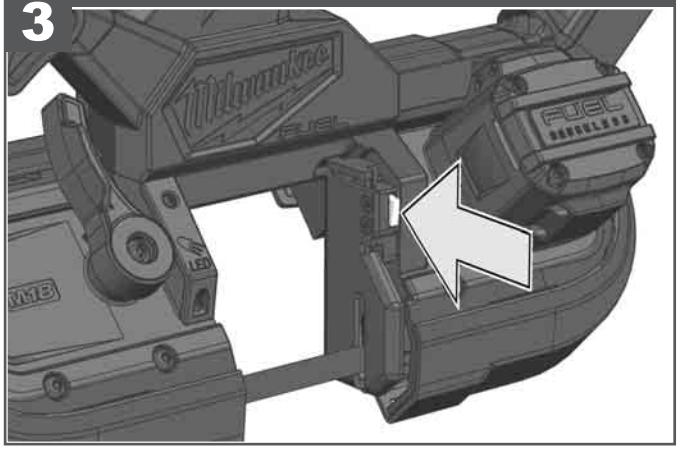

4

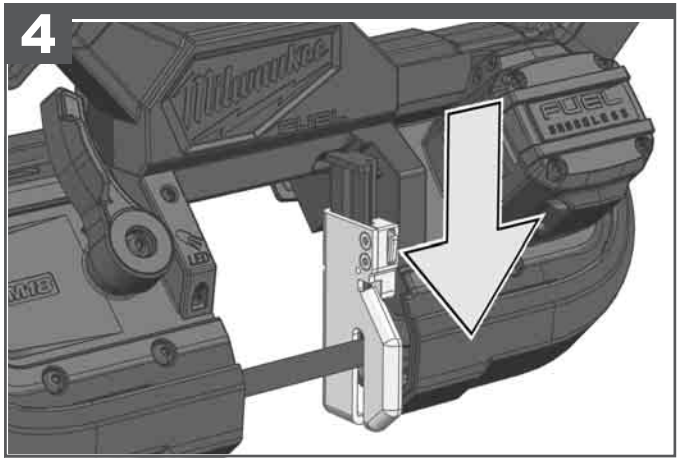

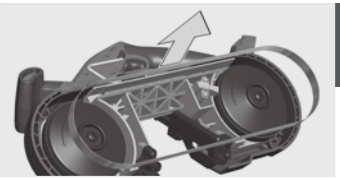

1

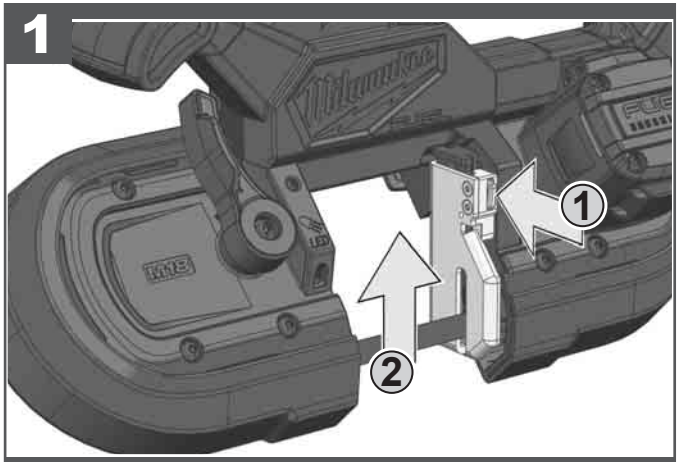

2

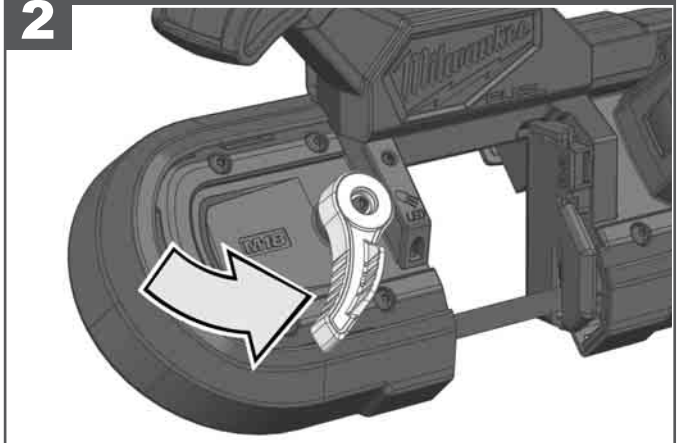

3

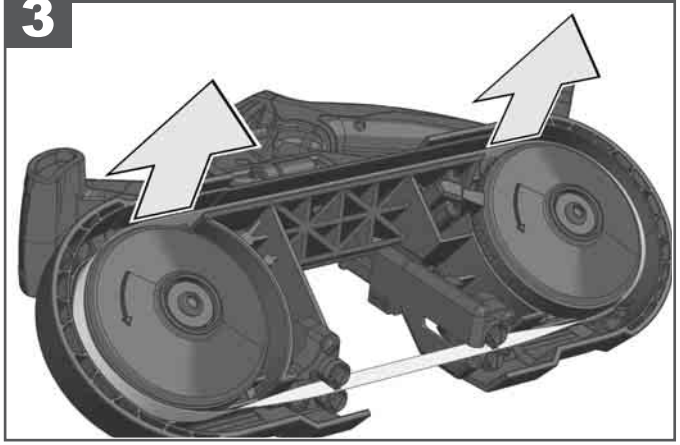

4

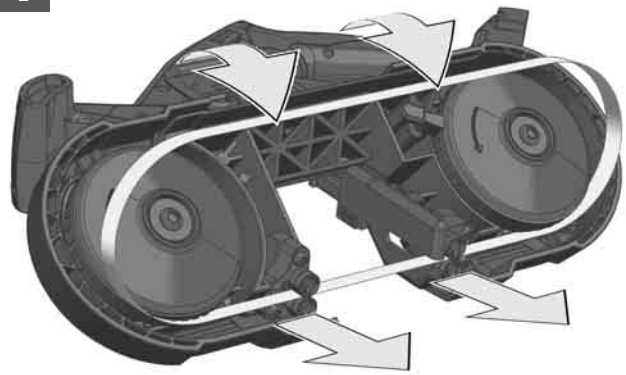

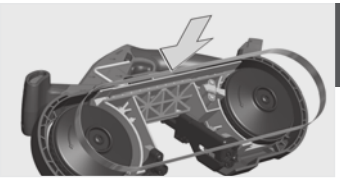



1

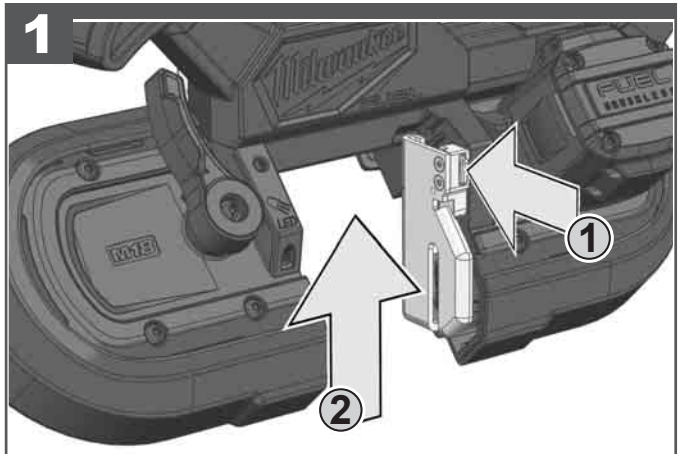

2

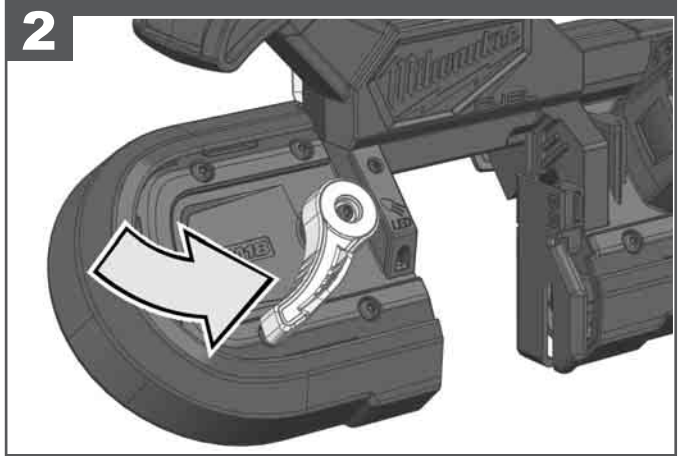

3

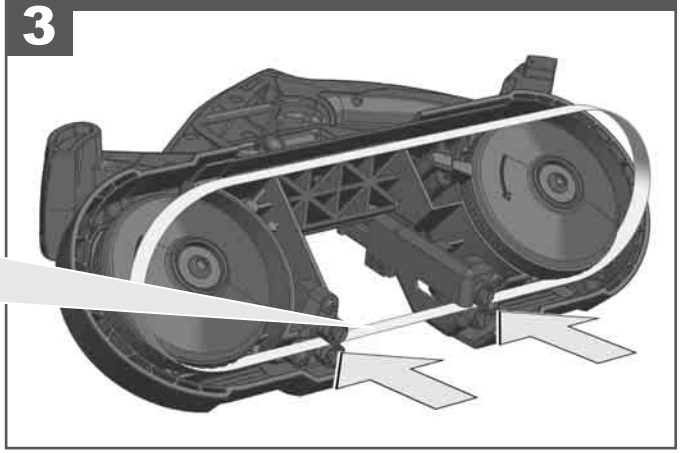

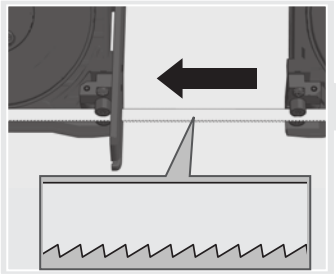

4

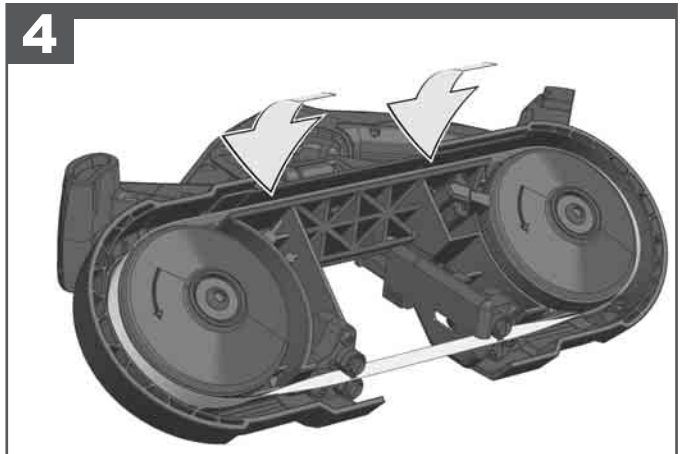

5

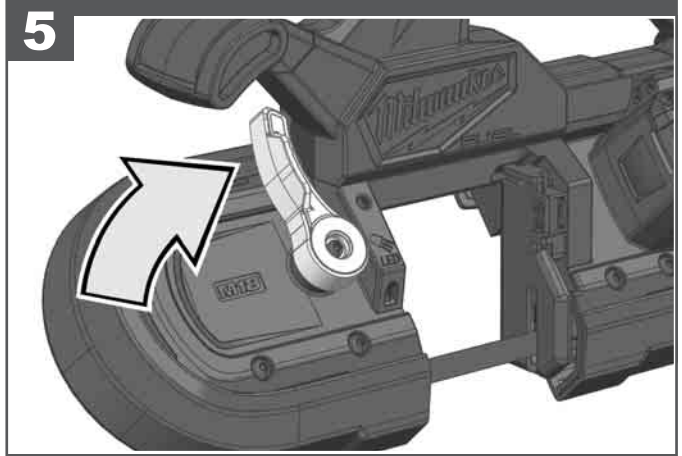

6

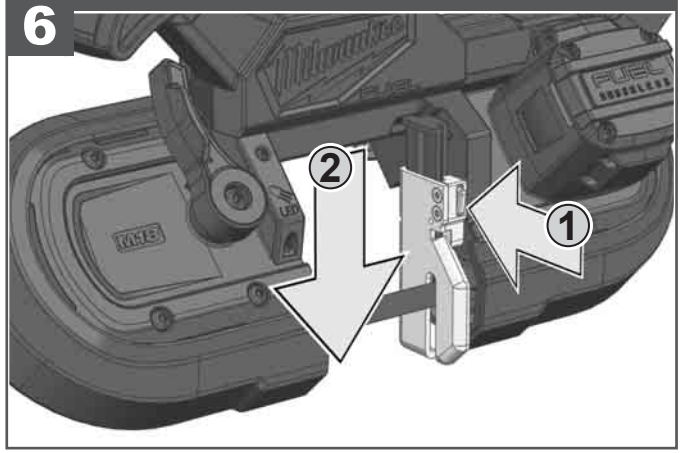

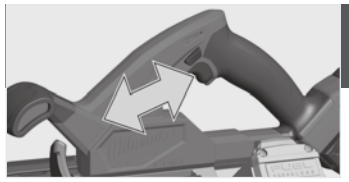

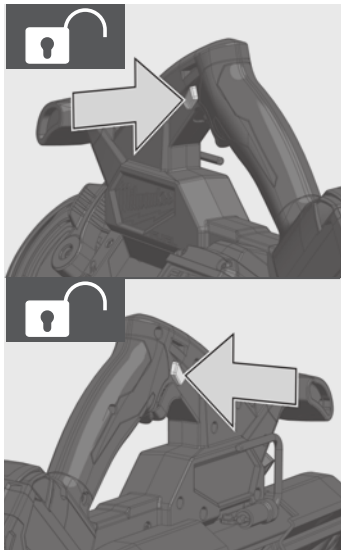

START

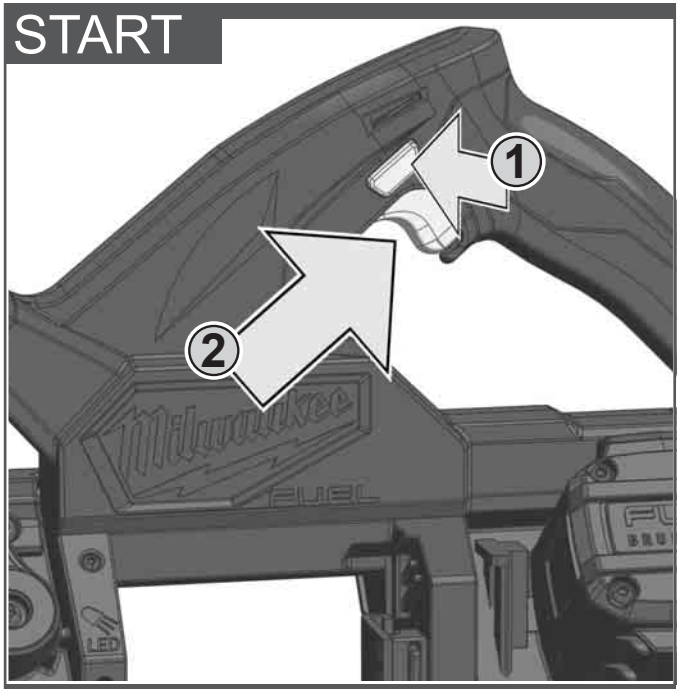

STOP

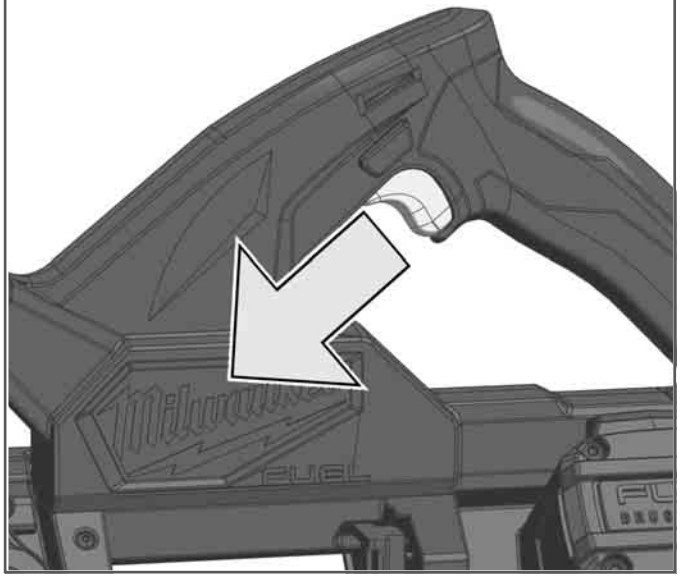

Insulated gripping surface

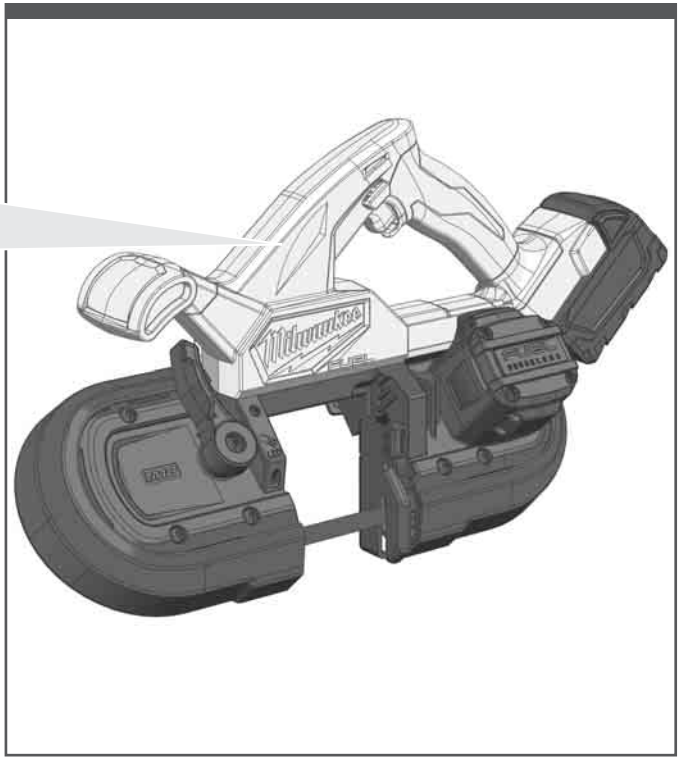

TIP

1

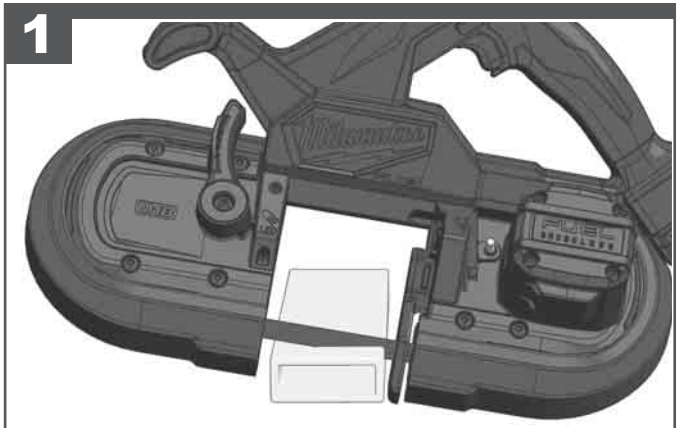

2

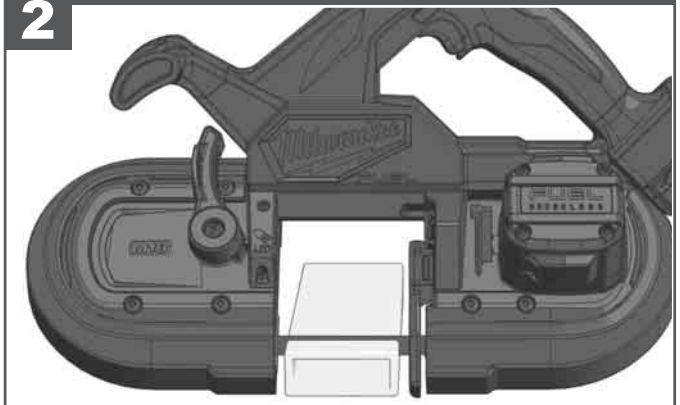

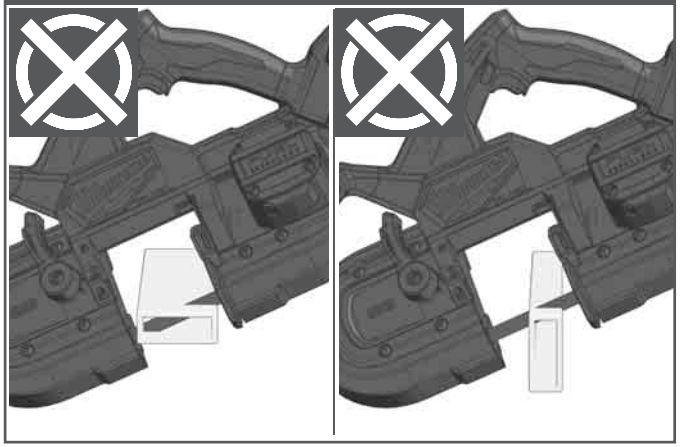

TIP

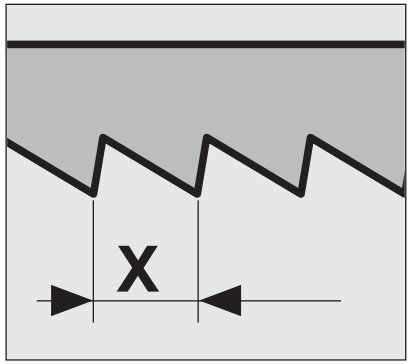
X

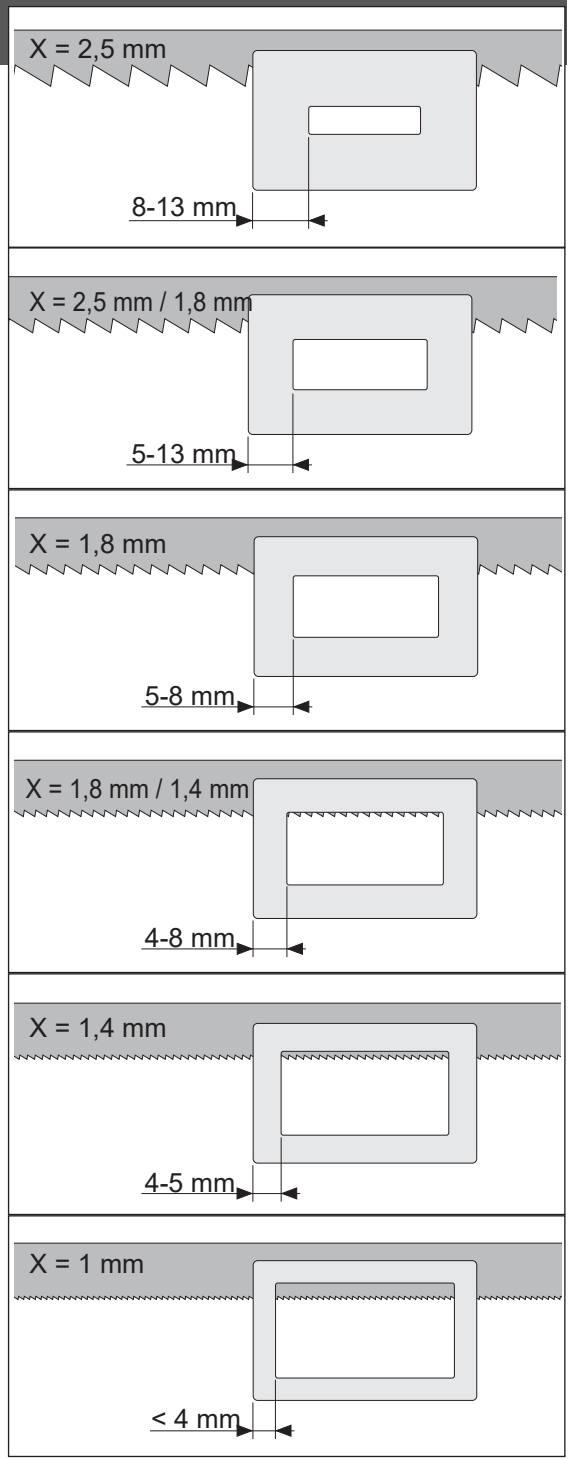
X = 2,5 mm
8-13 mm
X = 2,5 mm / 1,8 mm
5-13 mm
X = 1,8 mm
5-8 mm
X = 1,8 mm / 1,4 mm
4-8 mm
X = 1,4 mm
4-5 mm
X = 1 mm
< 4 mm





Hold the tool firmly with both hands.

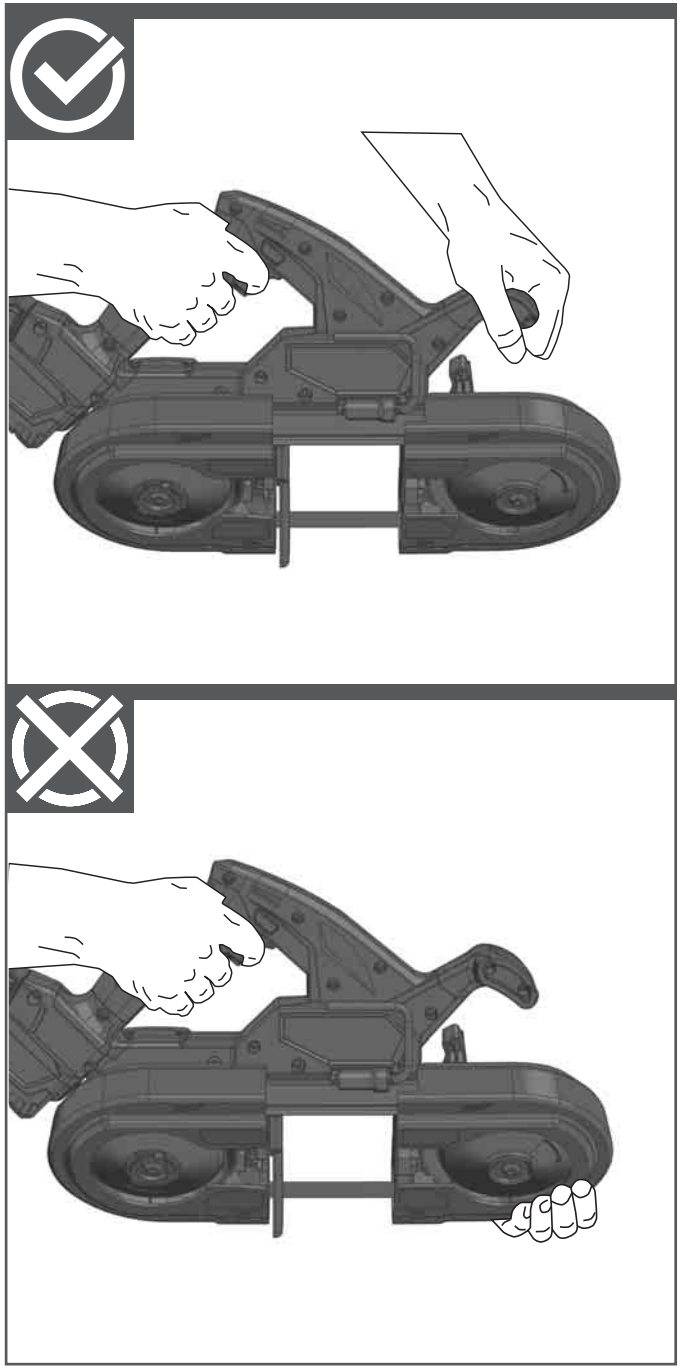

Do not place hand(s) on or around the guard / blade whilst tool has a battery pack connected



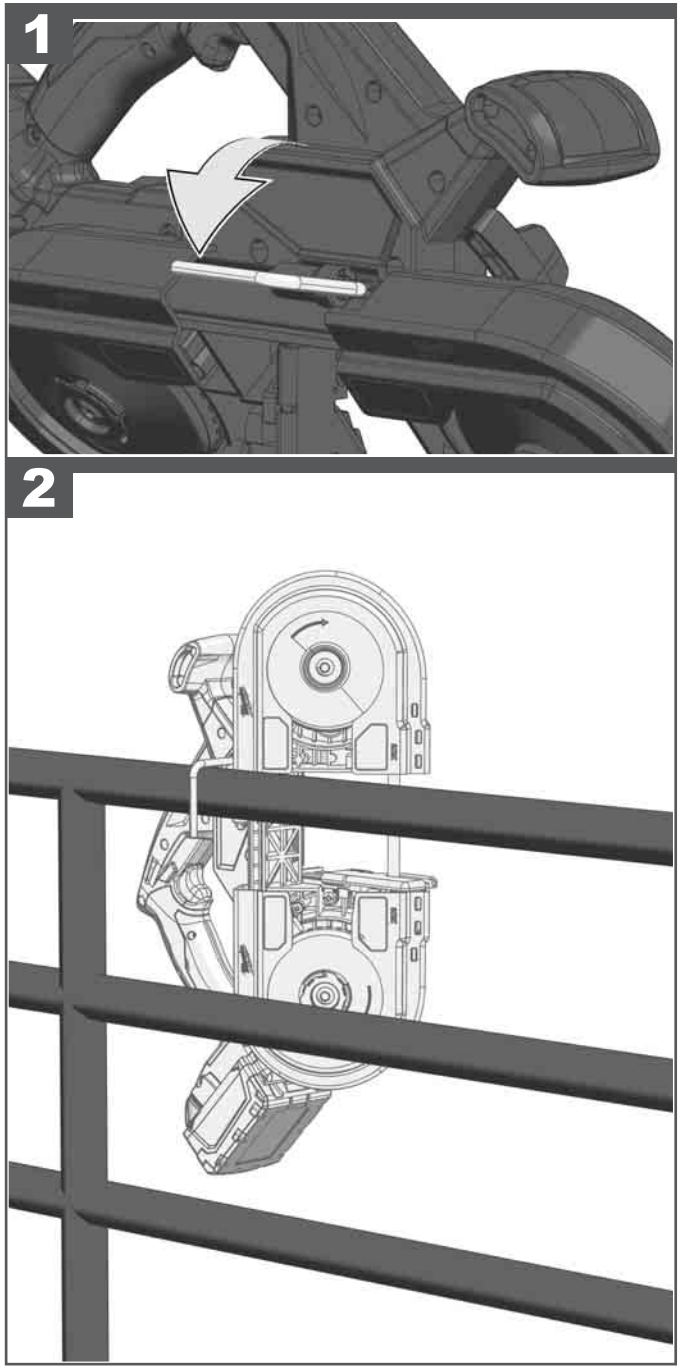

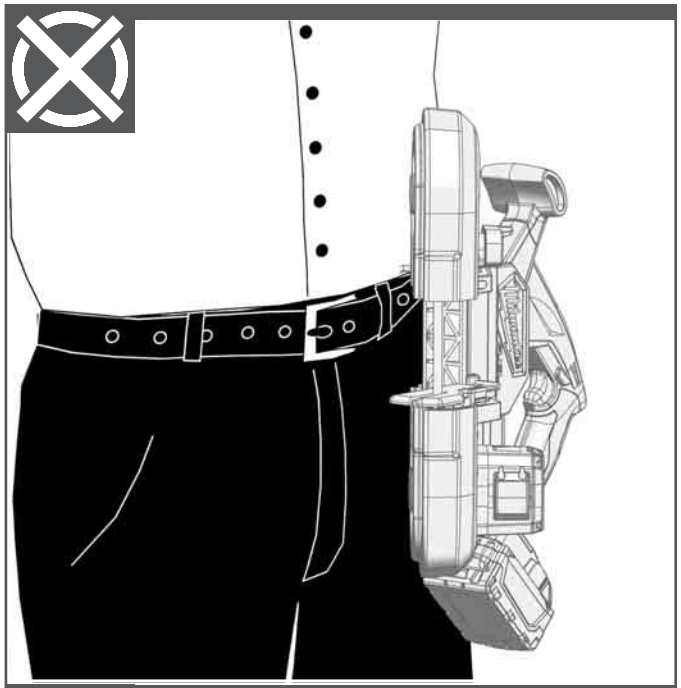



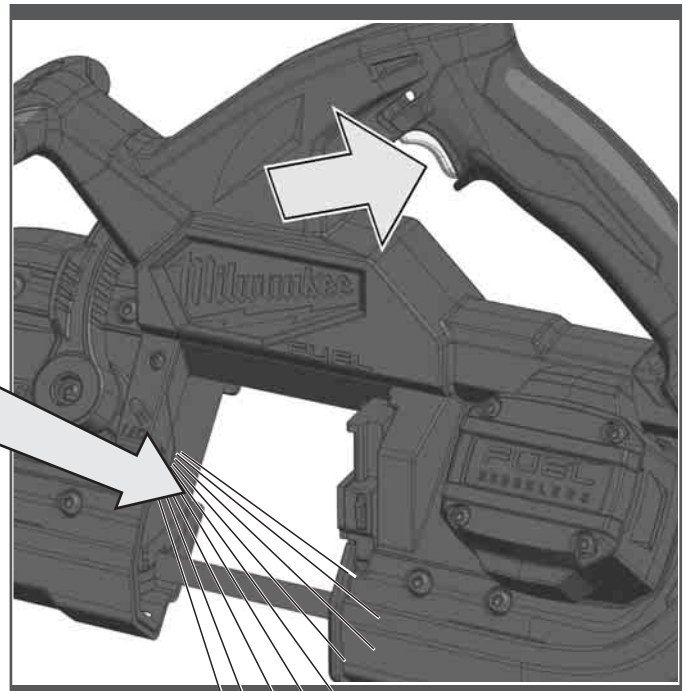

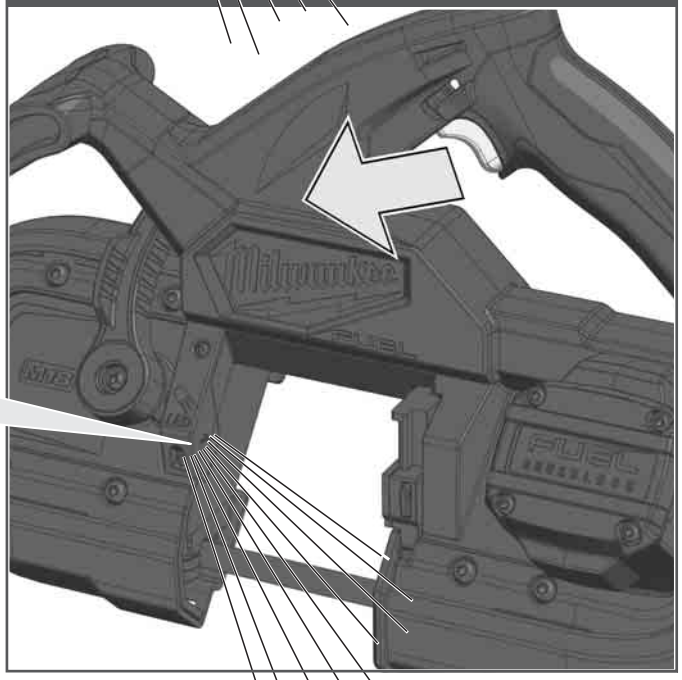

15 sec

TECHNICAL DATA CORDLESS BAND SAW M18FBS85

Production code	4746 78 01 000001-999999
No-load speed	0-164,59 m/min
Blade size	899 x 13 x 0,51 mm
Cutting capacity rectangular stock	85 x 85 mm
Cutting capacity Pipe	ø 85 mm
Battery voltage	18 V
Weight according EPTA-Procedure 01/2014 (2.0 Ah...12 Ah)	3,9...5,0 kg
Recommended ambient operating temperature	-18...+50 °C
Recommended battery types	M18B...M18HB
Recommended charger	M12-18C, M12-18AC, M12-18FC, M1418C6

Noise/vibration information
Measured values determined according to EN 60 745.
Typically, the A-weighted noise levels of the tool are:

Sound pressure level (Uncertainty K=3dB(A))	82,63 dB (A)
Sound power level (Uncertainty K=3dB(A))	93,63 dB (A)

Wear ear protectors!

Total vibration values (vector sum in the three axes) determined according to EN 60745.
Sawing of metal

Vibration emission value a_h	1,38 m/s²
Uncertainty K=	1,50 m/s²

WARNING

The vibration and noise emission level given in this information sheet has been measured in accordance with a standardized test given in EN 60745 and may be used to compare one tool with another. It may be used for a preliminary assessment of exposure.

The declared vibration and noise emission level represents the main applications of the tool. However if the tool is used for different applications, with different accessories or poorly maintained, the vibration and noise emission may differ. This may significantly increase the exposure level over the total working period.

An estimation of the level of exposure to vibration and noise should also take into account the times when the tool is switched off or when it is running but not actually doing the job. This may significantly reduce the exposure level over the total working period.

Identify additional safety measures to protect the operator from the effects of vibration and/or noise such as: maintain the tool and the accessories, keep the hands warm, organization of work patterns.

⚠ WARNING Read all safety warnings, instructions, illustrations and specifications provided with this power tool. Failure to follow all instructions listed below may result in electric shock, fire and/or serious injury.
Save all warnings and instructions for future reference.

⚠ BAND SAW SAFETY WARNINGS

Hold the power tool by insulated gripping surfaces, when performing an operation where the cutting accessory may contact hidden wiring. Cutting accessory contacting a „live“ wire may make exposed metal parts of the power tool „live“ and could give the operator an electric shock.

Wear ear protectors. Exposure to noise can cause hearing loss.

Always place the guide shoe on the workpiece when sawing.

Do not start the blade when in contact with workpiece. Wait for blade to reach full speed before beginning cut.

When blade is binding, or when interrupting a cut for any reason, release the trigger and hold the cutter motionless in the material until the blade comes to a complete stop. Never restart the machine when the blade in contact with workpiece.

Do not use cracked or distorted saw blades.

ADDITIONAL SAFETY AND WORKING INSTRUCTIONS

Use protective equipment. Always wear safety glasses when working with the machine. The use of protective clothing is recommended, such as dust mask, protective gloves, sturdy non-slip footwear, helmet and ear defenders.

The dust produced when using this tool may be harmful to health. Do not inhale the dust. Wear a suitable dust protection mask.

Do not machine any materials that present a danger to health (e.g. asbestos).

Switch the device off immediately if the insertion tool stalls! Do not switch the device on again while the insertion tool is stalled, as doing so could trigger a sudden recoil with a high reactive force. Determine why the insertion tool stalled and rectify this, paying heed to the safety instructions.

The possible causes may be:
- it is tilted in the workpiece to be machined
- it has pierced through the material to be machined
- the power tool is overloaded

Do not reach into the machine while it is running.

The insertion tool may become hot during use.
WARNING! Danger of burns
- when changing tools
- when setting the device down

Chips and splinters must not be removed while the machine is running.

When working in walls ceiling, or floor, take care to avoid electric cables and gas or waterpipes.

Clamp your workpiece with a clamping device. Unclamped workpieces can cause severe injury and damage.

Remove the battery pack before starting any work on the machine.

Do not dispose of used battery packs in the household refuse or by burning them. Milwaukee Distributors offer to retrieve old batteries to protect our environment.

Do not store the battery pack together with metal objects (short circuit risk).

No metal parts must be allowed to enter the battery section of the charger (short circuit risk).

Use only System Milwaukee 18 V chargers for charging System Milwaukee 18 V battery packs. Do not use battery packs from other systems.

Never break open battery packs and chargers and store only in dry rooms. Keep dry at all times.

Battery acid may leak from damaged batteries under extreme load or extreme temperatures. In case of contact with battery acid wash it off immediately with soap and water. In case of eye contact rinse thoroughly for at least 10 minutes and immediately seek medical attention.

Warning! To reduce the risk of fire, personal injury, and product damage due to a short circuit, never immerse your tool, battery pack or charger in fluid or allow a fluid to flow inside them. Corrosive or conductive fluids, such as seawater, certain industrial chemicals, and bleach or bleach containing products, etc., can cause a short circuit.

SPECIFIED CONDITIONS OF USE

The Band Saw cuts lengthways and mitre accurately in different type of metals such as metal profiles (UniStrut), pipes, metal studs, channels, aluminium profiles, metal sheets.

Do not use this product in any other way as stated for normal use.

EC-DECLARATION OF CONFORMITY

We declare under our sole responsibility that the product described under “Technical Data” fulfills all the relevant regulations and the directives 2011/65/EU (RoHS), 2014/30/EU, 2006/42/EC, and the following harmonized standards have been used:

EN 60745-1:2009 + A11:2010
EN 60745-2-20:2009
EN 55014-1:2017
EN 55014-2:2015
EN IEC 63000:2018

Winnenden, 2020-11-04



Alexander Krug
Managing Director

Authorized to compile the technical file.

Techtronic Industries GmbH
Max-Eyth-Straße 10
71364 Winnenden
Germany

GB-DECLARATION OF CONFORMITY

We declare as the manufacturer under our sole responsibility that the product described under “Technical Data” fulfills all the relevant provisions of the following Regulations S.I. 2008/1597 (as amended), S.I. 2016/1091 (as amended), S.I. 2012/3032 (as amended) and that the following designated standards have been used:

EN 60745-1:2009 + A11:2010
EN 60745-2-20:2009
EN 55014-1:2017
EN 55014-2:2015
EN IEC 63000:2018

Winnenden, 2020-11-04

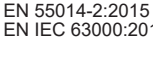

Alexander Krug
Managing Director

Authorized to compile the technical file.

Techtronic Industries GmbH
Max-Eyth-Straße 10
71364 Winnenden
Germany

BATTERIES

Battery packs which have not been used for some time should be recharged before use.

Temperatures in excess of 50°C (122°F) reduce the performance of the battery pack. Avoid extended exposure to heat or sunshine (risk of overheating).

The contacts of chargers and battery packs must be kept clean.

To obtain the longest possible battery life remove the battery pack from the charger once it is fully charged.

For battery pack storage longer than 30 days:
Store the battery pack where the temperature is below 27°C and away from moisture
Store the battery packs in a 30% - 50% charged condition
Every six months of storage, charge the pack as normal.

BATTERY PACK PROTECTION

In extremely high torque, binding, stalling and short circuit situations that cause high current draw, the tool will stop for about 2 seconds and then the tool will turn OFF.
To reset, release the trigger.
Under extreme circumstances, the internal temperatur of the battery could become to high. If this happens, the battery will shut down.

TRANSPORTING LITHIUM BATTERIES

Lithium-ion batteries are subject to the Dangerous Goods Legislation requirements.

Transportation of those batteries has to be done in accordance with local, national and international provisions and regulations.

- The user can transport the batteries by road without further requirements.
- Commercial transport of Lithium-Ion batteries by third parties is subject to Dangerous Goods regulations. Transport preparation and transport are exclusively to be carried out by appropriately trained persons and the process has to be accompanied by corresponding experts.

When transporting batteries:

- Ensure that battery contact terminals are protected and insulated to prevent short circuit.
- Ensure that battery pack is secured against movement within packaging.
- Do not transport batteries that are cracked or leak.

Check with forwarding company for further advice

MAINTENANCE

The ventilation slots of the machine must be kept clear at all times.

Use only Milwaukee accessories and Milwaukee spare parts. Should components need to be replaced which have not been described, please contact one of our Milwaukee service agents (see our list of guarantee/service addresses).

If needed, an exploded view of the tool can be ordered. Please state the machine type printed as well as the six-digit No. on the label and order the drawing at your local service agents or directly at: Techtronic Industries GmbH, Max-Eyth-Straße 10, 71364 Winnenden, Germany.

SYMBOLS



CAUTION! WARNING! DANGER!



Remove the battery pack before starting any work on the machine.



Please read the instructions carefully before starting the machine.



Keep hands away from rotating parts.



Always wear goggles when using the machine.



Wear gloves!



Do not dispose electric tools, batteries/ rechargeable batteries together with household waste material.
Electric tools and batteries that have reached the end of their life must be collected separately and returned to an environmentally compatible recycling facility.
Check with your local authority or retailer for recycling advice and collection point.

n_0 Stroke rate under no-load

V Volts



Direct current



European Conformity Mark



British Confomity Mark



Ukraine Conformity Mark



EurAsian Conformity Mark

Copyright 2020

Techtronic Industries GmbH
Max-Eyth-Str. 10
71364 Winnenden
Germany
+49 (0) 7195-12-0
www.milwaukeetool.eu

Techtronic Industries (UK) Ltd
Fieldhouse Lane
Marlow Bucks SL7 1HZ
UK

(10.20)
4100 4703 24