Nothing but **HEAVY DUTY.®**



M18 ONEFHIWF1D
M18 ONEFHIWF1DS

Original instructions

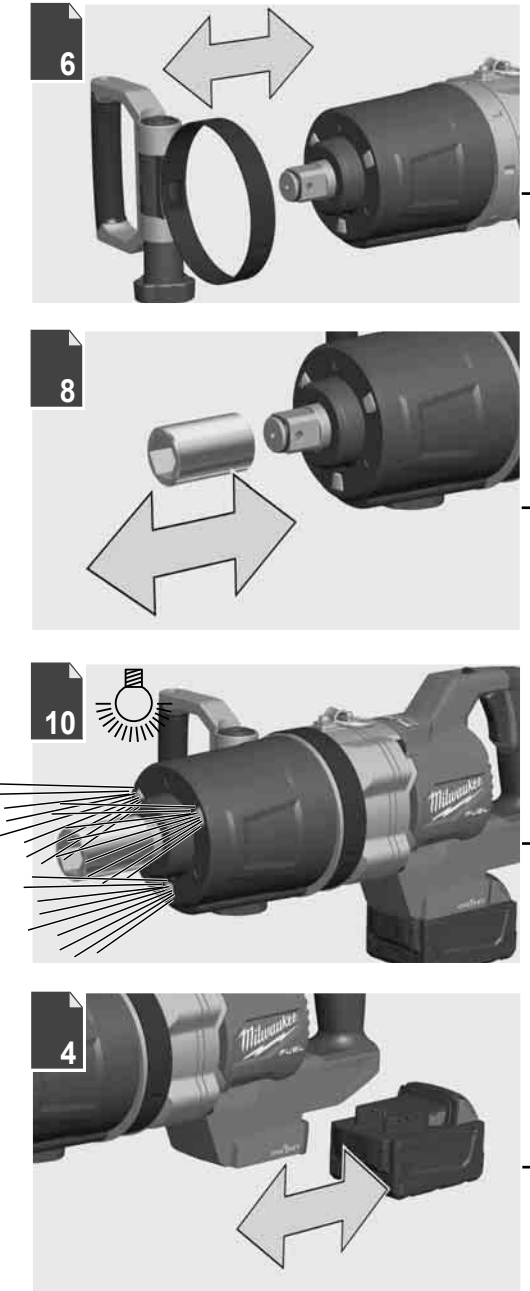





16 Text section with Technical Data, important Safety and Working Hints and description of Symbols

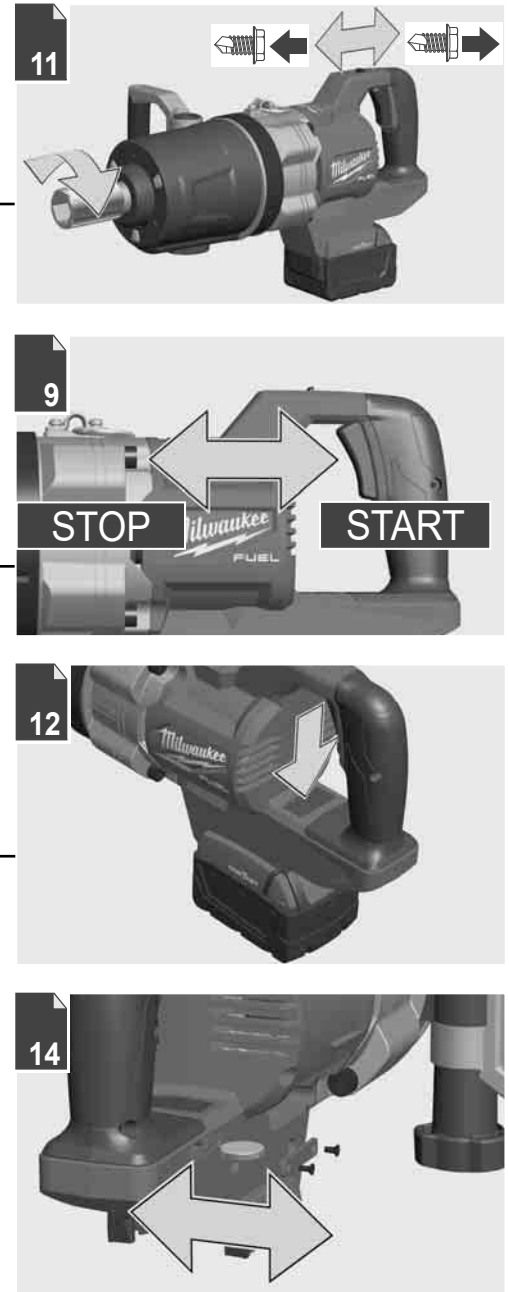

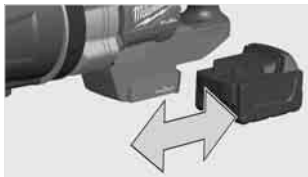

Remove the battery pack before starting any work on the machine.

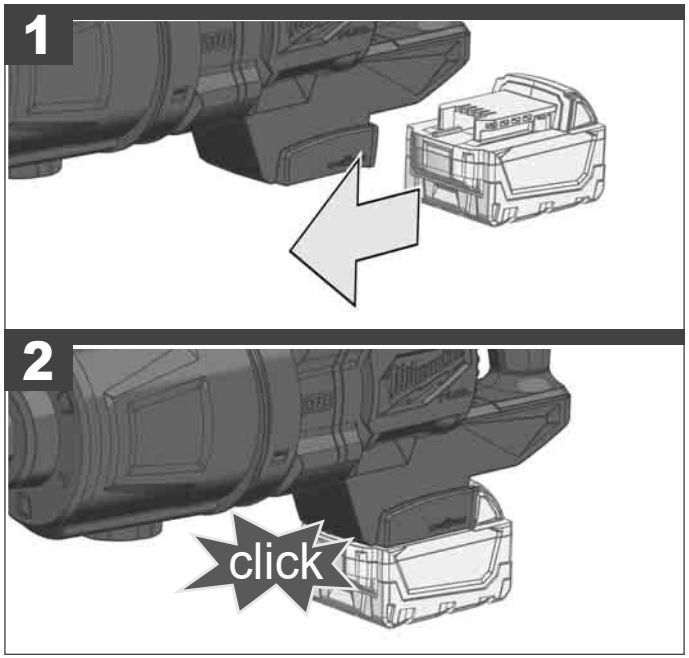

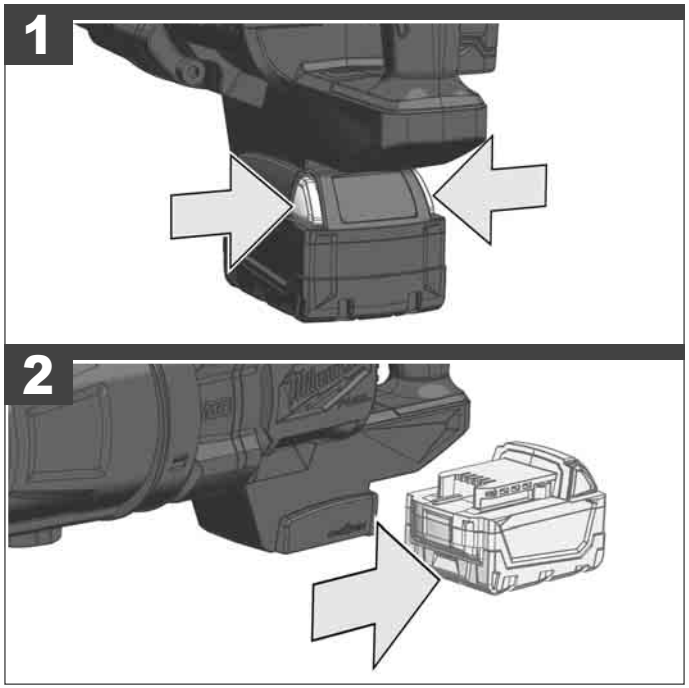

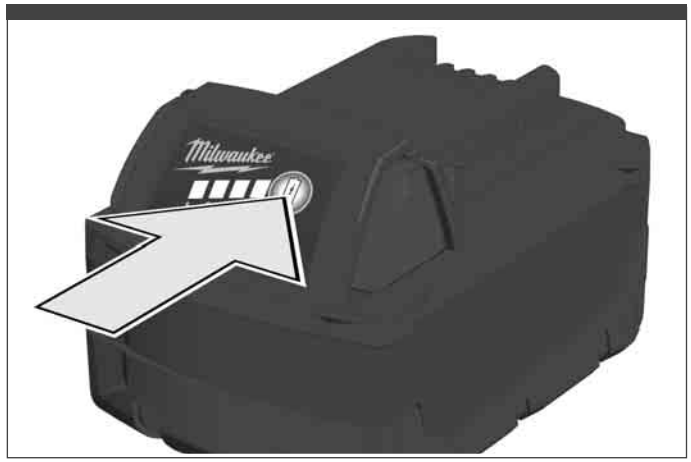

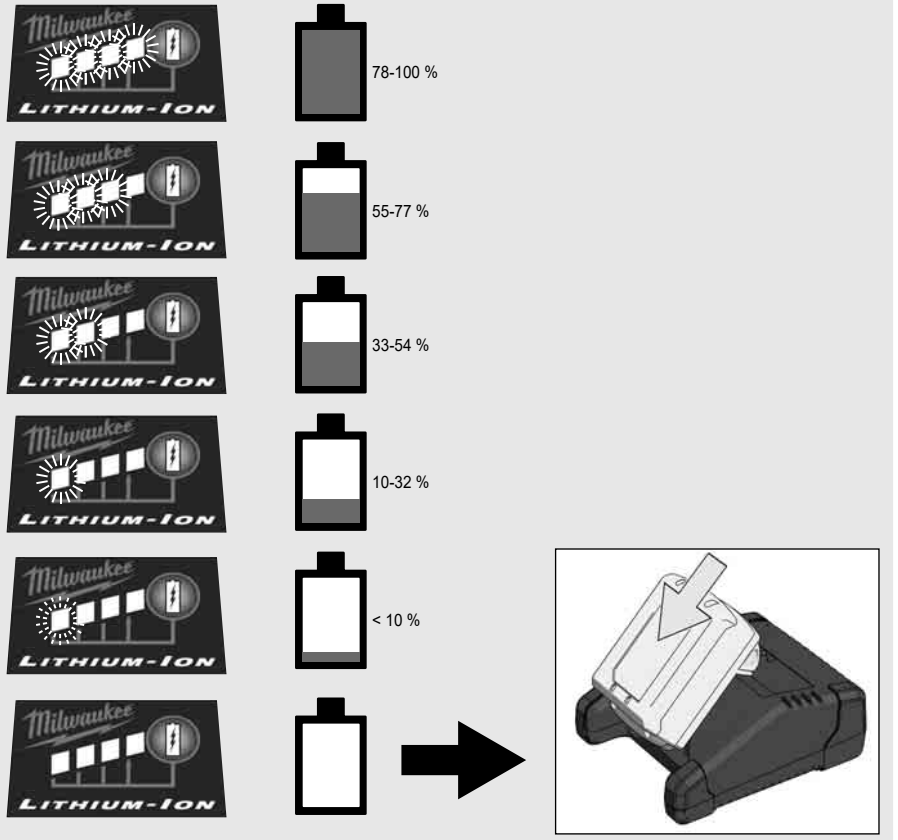



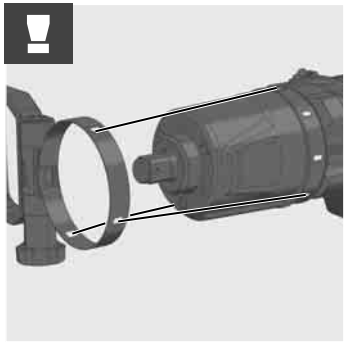

1

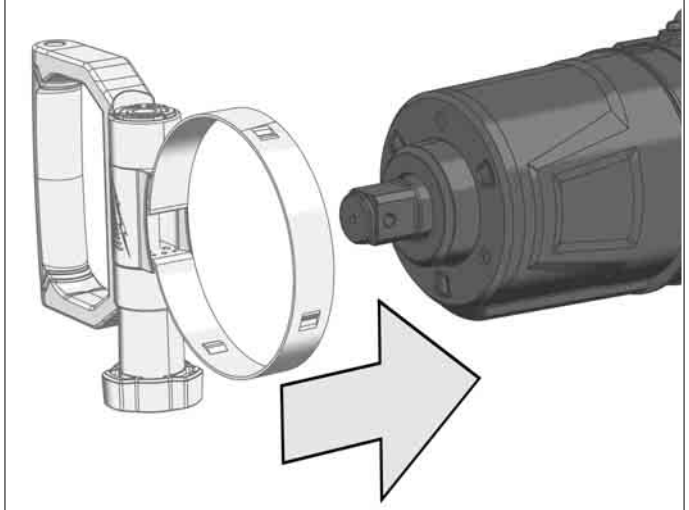

2

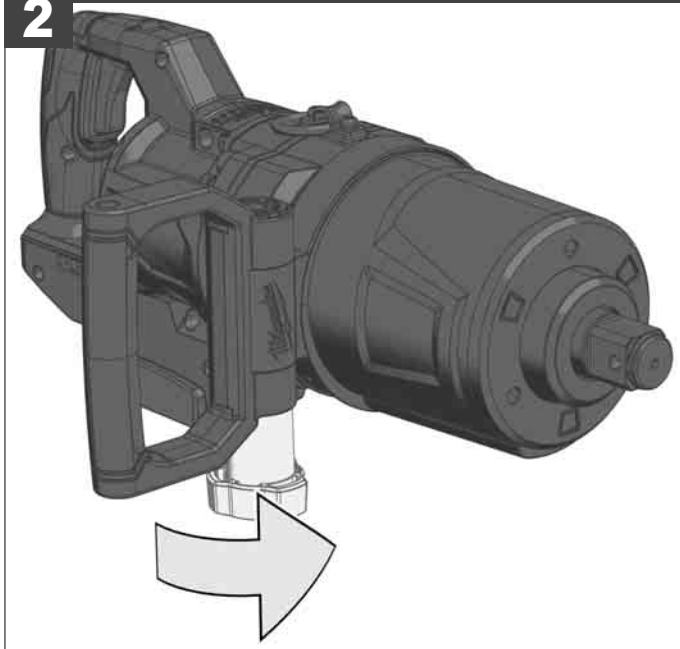

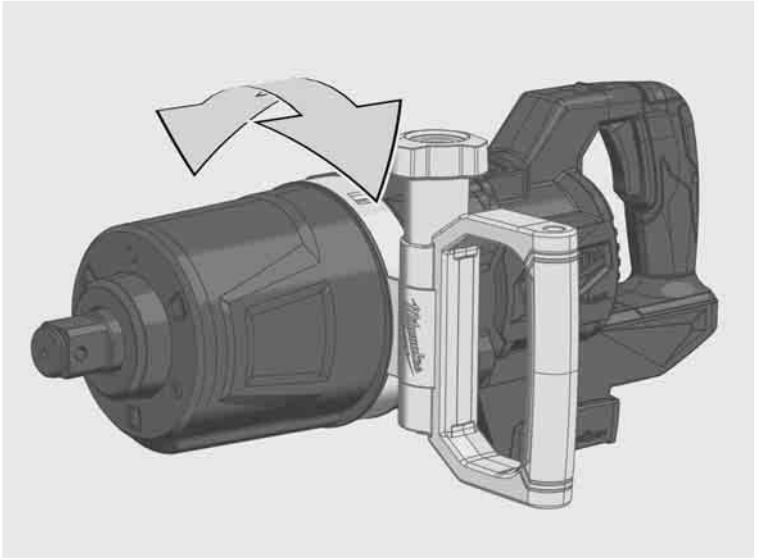

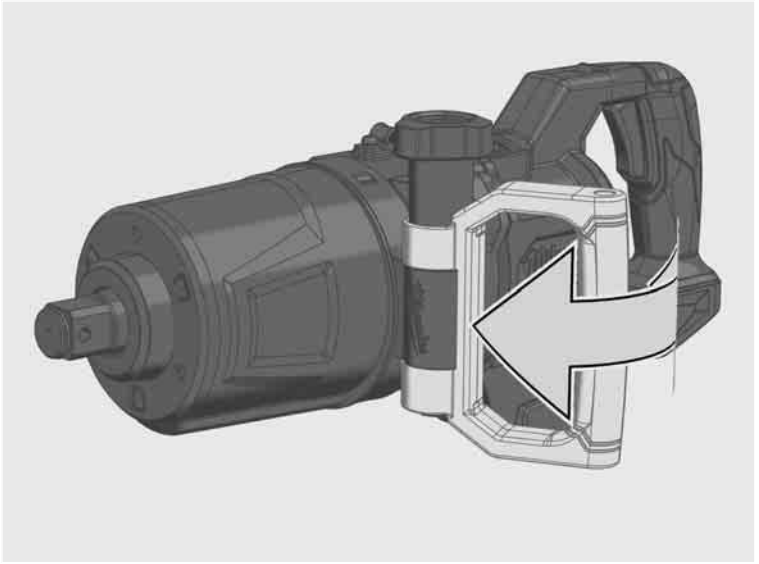

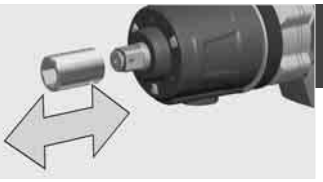

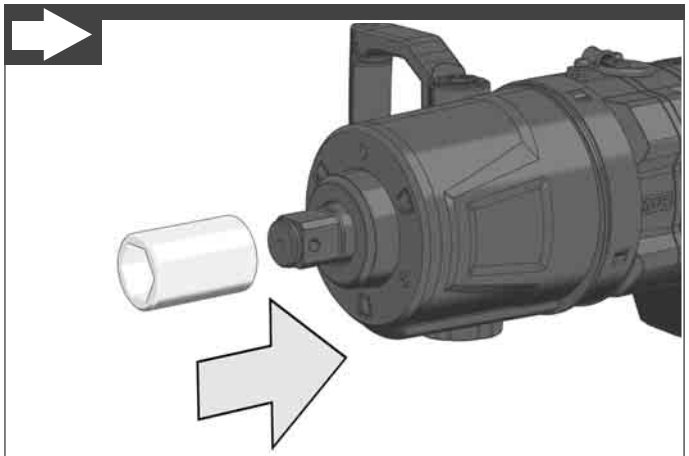



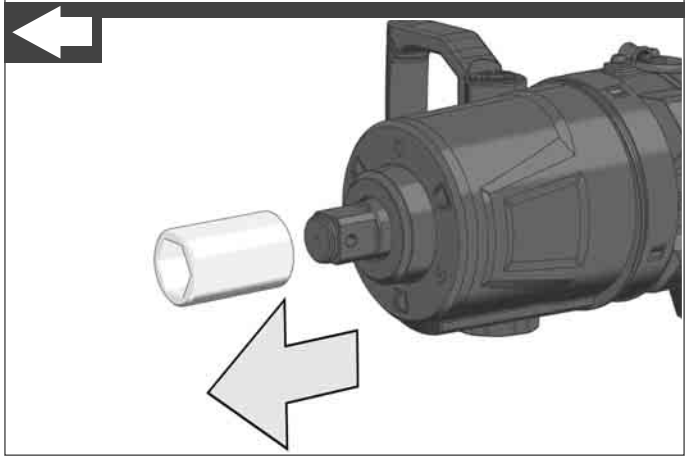



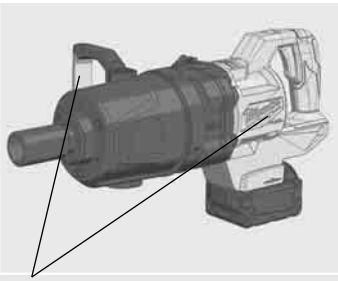

Handle (insulated gripping surface)

START

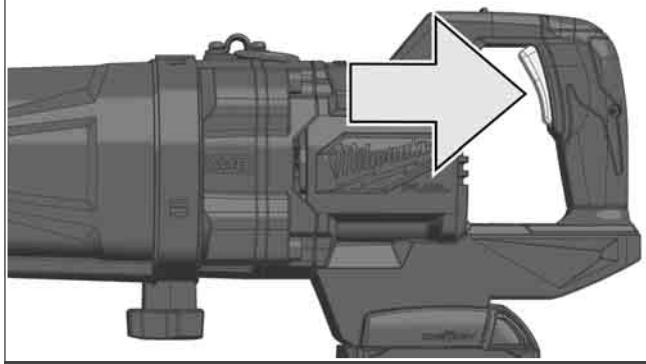

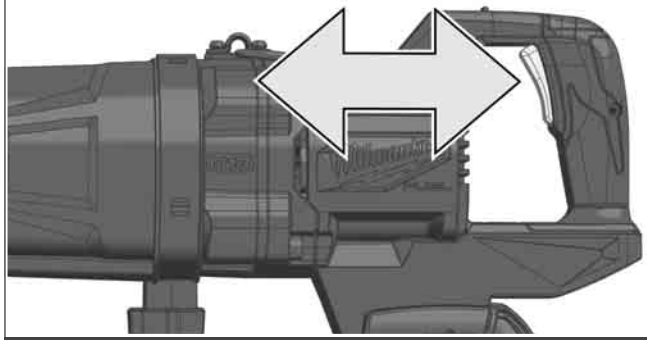

STOP

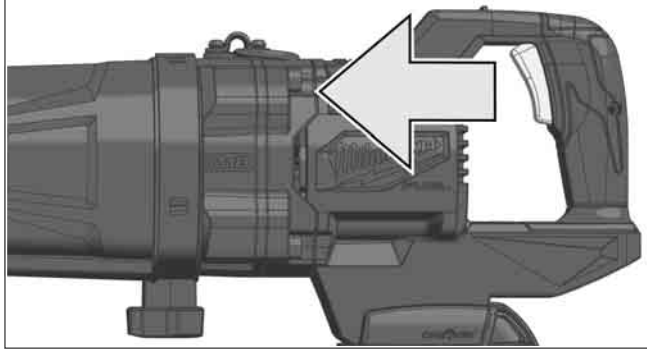



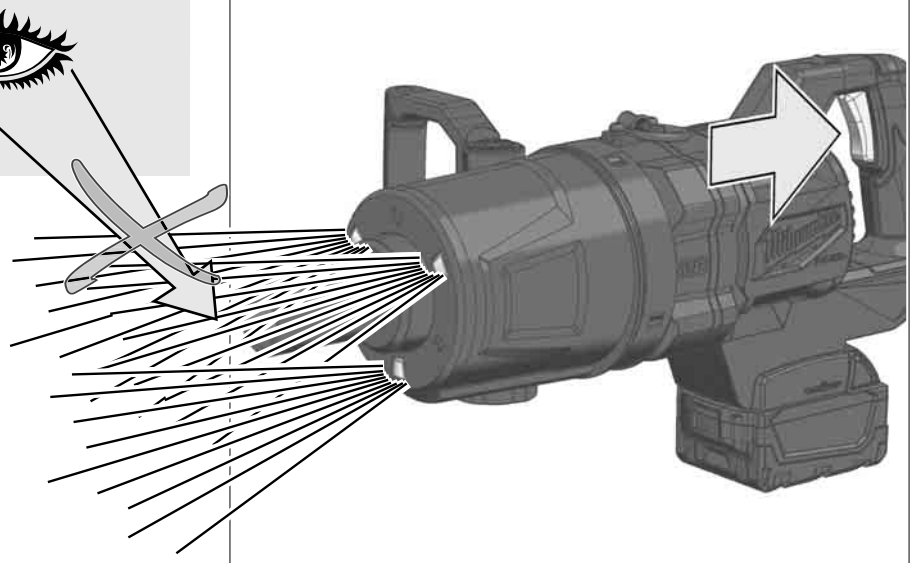



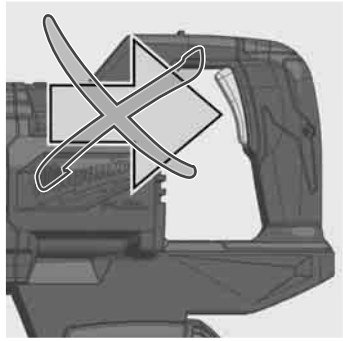

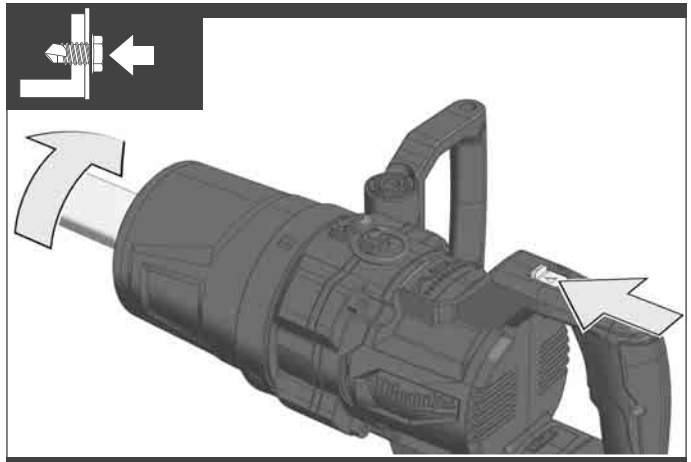

LOCK

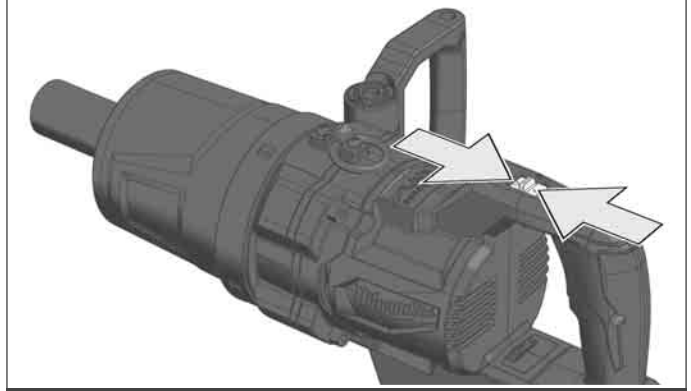

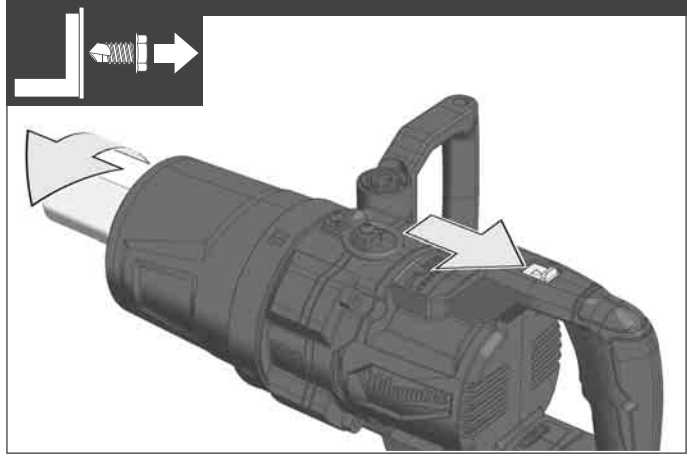



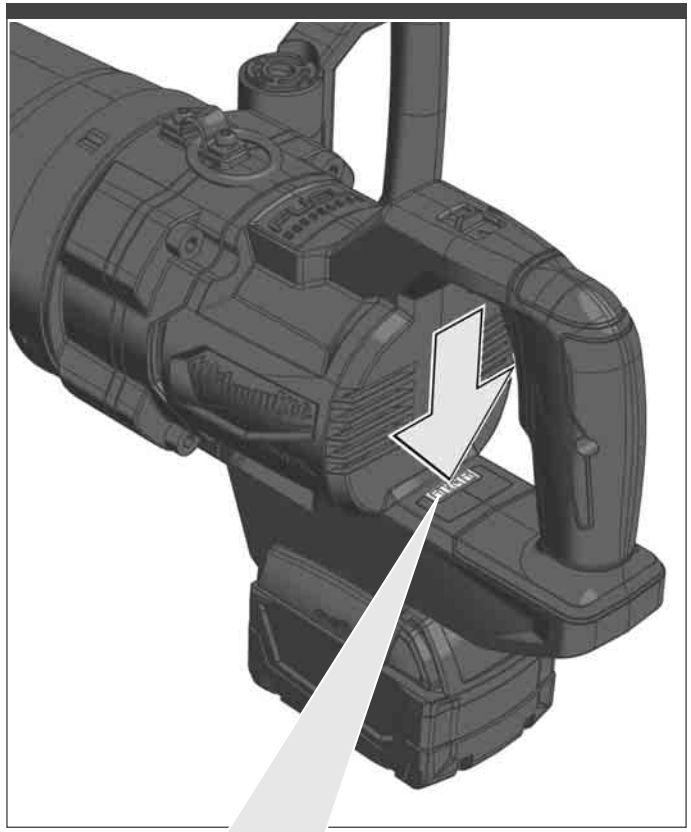

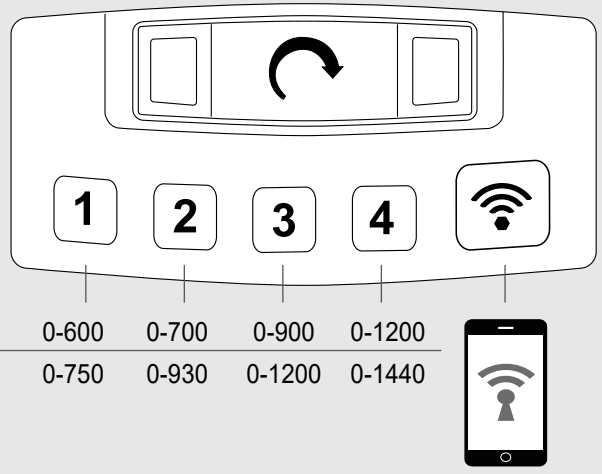



Accessory - Not included in standard equipment, available as an accessory.

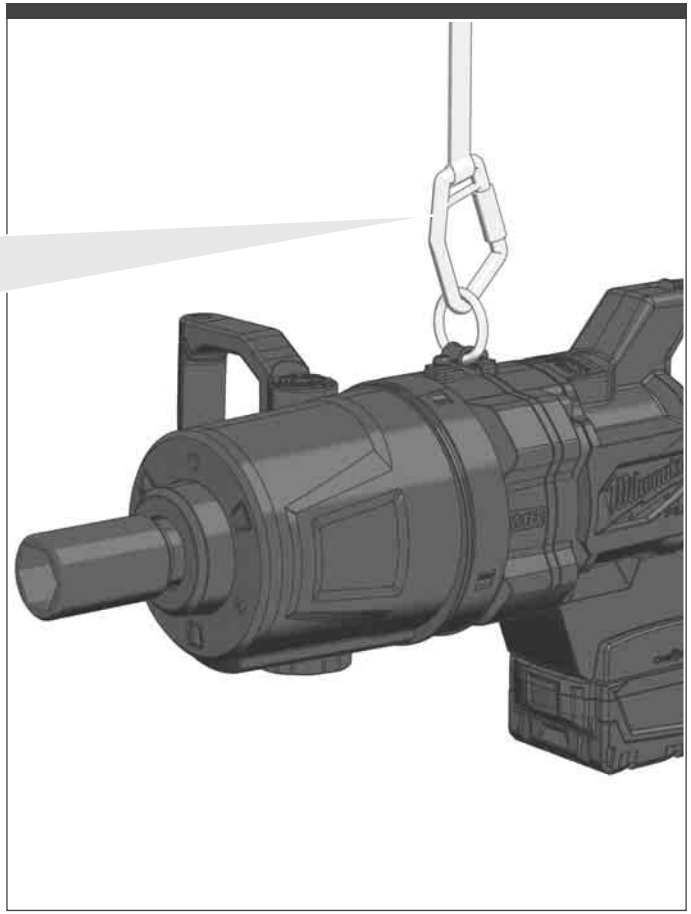

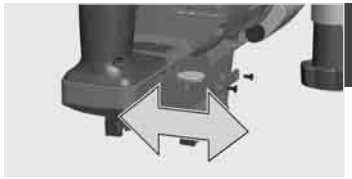

1

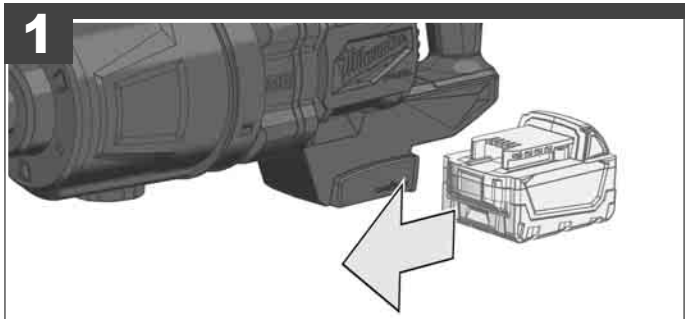

2

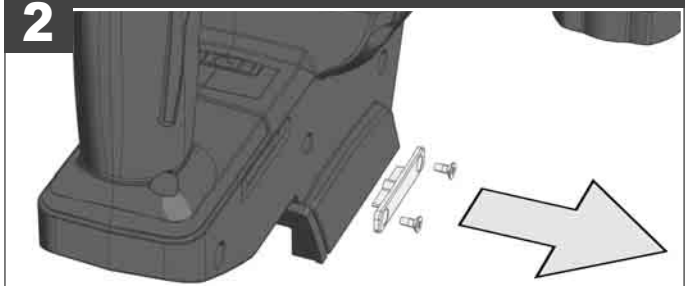

3

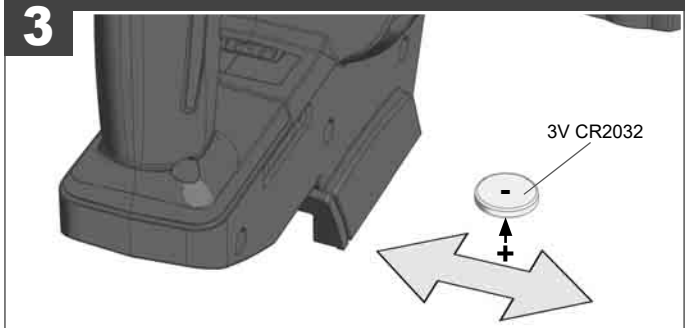

4

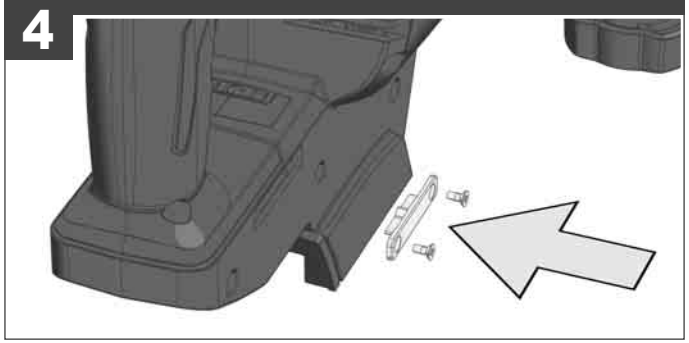

TECHNICAL DATA	CORDLESS IMPACT SCREWDRIVER	M18ONEFHIWF1D	M18 ONEFHIWF1DS
Production code		4771 34 02... 000001-999999	4771 25 02 000001-999999
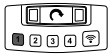	No-load speed	0-600 min^{-1}	0-600 min^{-1}
	Impact range	0-750 min^{-1}	0-750 min^{-1}
	Torque	1180 Nm	1180 Nm
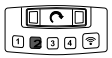	No-load speed	0-700 min^{-1}	0-700 min^{-1}
	Impact range	0-930 min^{-1}	0-930 min^{-1}
	Torque	1254 Nm	1254 Nm
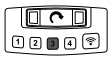	No-load speed	0-900 min^{-1}	0-900 min^{-1}
	Impact range	0-1200 min^{-1}	0-1200 min^{-1}
	Torque	1966 Nm	1966 Nm
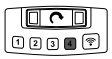	No-load speed	0-1200 min^{-1}	0-1200 min^{-1}
	Impact range	0-1440 min^{-1}	0-1440 min^{-1}
	Torque	2576 Nm	2576 Nm
Torque max		2711 Nm	2711 Nm
Max. diameter bolt / nut		1-1/2"	1-1/2"
Battery voltage		18 V	18 V
Weight according EPTA-Procedure 01/2014 (12 Ah)		12,3 kg	11,1 kg
Frequency band(s) of Bluetooth		2402-2480 MHz	2402-2480 MHz
Radio-frequency power		1,8 dBm	1,8 dBm
Bluetooth version		4.0 BT signal mode	4.0 BT signal mode
Recommended ambient operating temperature		-18 …. +50 °C	
Recommended battery Type		M18B …. M18HB	
Recommended charger Type		M12-18C, M12-18AC, M12-18FC, M1418C6	

Noise/vibration information
Measured values determined according to EN 62841.
Typically, the A-weighted noise levels of the tool are:

Sound pressure level (Uncertainty K=3dB(A))	101,42 dB (A)	102,07 dB (A)
Sound power level (Uncertainty K=3dB(A))	112,42 dB (A)	113,07 dB (A)

Wear ear protectors!

Total vibration values (vector sum in the three axes) determined according to EN 62841.
Vibration emission value a_h

Impact tightening of fasteners of the maximum capacity of the tool.	26,87 m/s^2	24,24 m/s^2
Uncertainty K=	1,5 m/s^2	1,5 m/s^2

WARNING

The vibration and noise emission level given in this information sheet has been measured in accordance with a standardized test given in EN 62841 and may be used to compare one tool with another. It may be used for a preliminary assessment of exposure.

The declared vibration and noise emission level represents the main applications of the tool. However if the tool is used for different applications, with different accessories or poorly maintained, the vibration and noise emission may differ. This may significantly increase the exposure level over the total working period.

An estimation of the level of exposure to vibration and noise should also take into account the times when the tool is switched off or when it is running but not actually doing the job. This may significantly reduce the exposure level over the total working period.

Identify additional safety measures to protect the operator from the effects of vibration and/or noise such as: maintain the tool and the accessories, keep the hands warm, organization of work patterns.

⚠ WARNING Read all safety warnings, instructions, illustrations and specifications provided with this power tool. Failure to follow all instructions listed below may result in electric shock, fire and/or serious injury.

Save all warnings and instructions for future reference.

⚠ IMPACT DRIVER SAFETY WARNINGS

Hold the power tool by insulated gripping surfaces, when performing an operation where the fastener may contact hidden wiring. Fasteners contacting a „live“ wire may make exposed metal parts of the power tool „live“ and could give the operator an electric shock.

Wear ear protectors. Exposure to noise can cause hearing loss.

ADDITIONAL SAFETY AND WORKING INSTRUCTIONS

Use protective equipment. Always wear safety glasses when working with the machine. The use of protective clothing is recommended, such as dust mask, protective gloves, sturdy non-slip footwear, helmet and ear defenders.

The dust produced when using this tool may be harmful to health. Do not inhale the dust. Wear a suitable dust protection mask.

Do not machine any materials that present a danger to health (e.g. asbestos).

Switch the device off immediately if the insertion tool stalls! Do not switch the device on again while the insertion tool is stalled, as doing so could trigger a sudden recoil with a high reactive force. Determine why the insertion tool stalled and rectify this, paying heed to the safety instructions.

The possible causes may be:
- it is tilted in the workpiece to be machined
- it has pierced through the material to be machined
- the power tool is overloaded

Do not reach into the machine while it is running.

The insertion tool may become hot during use.
WARNING! Danger of burns
- when changing tools
- when setting the device down

Chips and splinters must not be removed while the machine is running.

When working in walls ceiling, or floor, take care to avoid electric cables and gas or waterpipes.

Clamp your workpiece with a clamping device. Unclamped workpieces can cause severe injury and damage.

Remove the battery pack before starting any work on the machine.

Do not dispose of used battery packs in the household refuse or by burning them. Milwaukee Distributors offer to retrieve old batteries to protect our environment.

Do not store the battery pack together with metal objects (short circuit risk).

Use only System M18 chargers for charging System M18 battery packs. Do not use battery packs from other systems.

Never break open battery packs and chargers and store only in dry rooms. Keep dry at all times.

Battery acid may leak from damaged batteries under extreme load or extreme temperatures. In case of contact with battery acid wash it off immediately with soap and water. In case of eye contact rinse thoroughly for at least 10 minutes and immediately seek medical attention.

⚠ **WARNING** This device contains a lithium button/coin cell battery. A new or used battery can cause severe internal burns and lead to death in as little as 2 hours if swallowed or enters the body. Always secure the battery cover. If it does not close securely, stop using the device, remove the batteries, and keep it away from children. If you think batteries may have been swallowed or entered the body, seek immediate medical attention.

Warning! To reduce the risk of fire, personal injury, and product damage due to a short circuit, never immerse your tool, battery pack or charger in fluid or allow a fluid to flow inside them. Corrosive or conductive fluids, such as seawater, certain industrial chemicals, and bleach or bleach containing products, etc., can cause a short circuit.

SPECIFIED CONDITIONS OF USE

The cordless impact wrench can be used to tighten and loosen nuts and bolts wherever no mains connection is available.

Do not use this product in any other way as stated for normal use.

EC-DECLARATION OF CONFORMITY

We declare as the manufacturer under our sole responsibility that the product described under “Technical Data” fulfills all the relevant regulations and the directives 2011/65/EU (RoHS), 2014/53/EU, 2006/42/EC, and the following harmonized standards have been used:

EN 62841-1:2015
EN 62841-2-2:2014
EN IEC 55014-1:2021
EN IEC 55014-2:2021
EN 62479:2010
EN 301 489-1 V2.2.3
EN 301 489-17V3.2.4
EN 300 328 V2.2.2
EN IEC 63000:2018

Winnenden, 2021-01-28

Alexander Krug
Managing Director

Authorized to compile the technical file.

Techtronic Industries GmbH
Max-Eyth-Straße 10
71364 Winnenden
Germany

GB-DECLARATION OF CONFORMITY

We declare as the manufacturer under our sole responsibility that the product described under “Technical Data” fulfills all the relevant provisions of the following Regulations S.I. 2008/1597 (as amended), S.I. 2017/1206 (as amended), S.I. 2012/3032 (as amended) and that the following designated standards have been used:

BS EN 62841-1:2015
BS EN 62841-2-2:2014
BS EN IEC 55014-1:2021
BS EN IEC 55014-2:2021
BS EN 62479:2010
EN 301 489-1 V2.2.3
EN 301 489-17V3.2.4
EN 300 328 V2.2.2
BS EN IEC 63000:2018

Winnenden, 2021-08-18

Alexander Krug
Managing Director

Authorized to compile the technical file.

Techtronic Industries GmbH
Max-Eyth-Straße 10
71364 Winnenden
Germany

OPERATION

Note: It is recommended after fastening to always check the torque with a torque wrench.

The fastening torque is affected by a wide variety of factors including the following.

- State of battery charge – When the battery is discharged voltage will drop and the fastening torque will be reduced.
- Operation at speeds – Operating the tool at low speeds will cause a reduction in fastening torques.
- Fastening position – Holding the tool or the driving fastener in various angles will affect the torque.
- Drive accessory/socket – Failure to use the correct size accessory or socket, or a non-impact rated accessory may cause a reduction in the fastening torque.
- Use of accessories and extensions – Depending on the accessory or extension fitment can reduce the fastening force of the impact wrench.
- Bolt/Nut – Fastening torques may differ according to the diameter of the nut or bolt, the class of nut/bolt and the length of nut/bolt.
- Condition of the fastener – Contaminated, corroded, dry or lubricated fasteners may vary the fastening torques.
- Condition and base material – The base material of the fastener and any component in between the surfaces may effect the fastening torque (dry or lubricated base, soft or hard base, disc, seal or washer between fastener and base material).

IMPACTING TECHNIQUES

The longer a bolt, screw, or nut is impacted, the tighter it will become.

To help prevent damaging the fasteners or workpieces, avoid excessive impacting.

Be particularly careful when impacting smaller fasteners because they require less impacting to reach optimum torque.

Practice with various fasteners, noting the length of time required to reach the desired torque.

Check the tightness with a hand-torque wrench.

If the fasteners are too tight, reduce the impacting time.

If they are not tight enough, increase the impacting time.

Oil, dirt, rust or other matter on the threads or under the head of the fastener affects the degree of tightness.

The torque required to loosen a fastener averages 75% to 80% of the tightening torque, depending on the condition of the contacting surfaces.

On light gasket jobs, run each fastener down to a relatively light torque and use a hand torque wrench for final tightening.

DRIVE CONTROL

The drive control button is used to adjust the torque, rotation speed (RPM), and impact speed (IPM) for the application.

To select the drive control mode:

1. Pull and release the trigger to turn on the tool. The current mode indicator is lit.

2. Press the drive control button to cycle through the modes. Select wireless to change the default settings via the ONE-KEY™ App on your smart device. When the desired mode indicator is lit, begin work.

NOTE: Select the torque range in accordance with the equipment manufacturers fastening instructions.

For precision applications, confirm the final tightening torque with a calibrated device.

ONE-KEY™

To learn more about the ONE-KEY functionality for this tool, please reference the Quick Start guide included with this product or go to www.milwaukeetool.com/one-key. To download the ONE-KEY app, visit the App Store or Google Play from your smart device.

When the product experiences ESD, the speed LED shuts down and the product cannot adjust speed. It needs the battery and coin cell removed and reinserted to recover (see page 4 & 15).
Also, when the product experiences ESD, the Bluetooth communication will be disconnected. It needs to be reset manually to recover.
We considered the results to be within our minimum acceptable performance level according to EN IEC 55014-2:2021 / EN 301 489-1 V2.2.3 / EN 301 489-17 V3.2.4.

BATTERIES

Battery packs which have not been used for some time should be recharged before use.

Temperatures in excess of 50°C (122°F) reduce the performance of the battery pack. Avoid extended exposure to heat or sunshine (risk of overheating).

The contacts of chargers and battery packs must be kept clean.

For an optimum life-time, after use, the battery packs have to be fully charged.

To obtain the longest possible battery life remove the battery pack from the charger once it is fully charged.

For battery pack storage longer than 30 days:
Store the battery pack where the temperature is below 27°C and away from moisture
Store the battery packs in a 30% - 50% charged condition
Every six months of storage, charge the pack as normal.

BATTERY PACK PROTECTION

In extremely high torque, binding, stalling and short circuit situations that cause high current draw, the tool will vibrate for about 2 seconds and then the tool will turn OFF.
To reset, release the trigger.
Under extreme circumstances, the internal temperatur of the battery could become to high. If this happens, the battery will shut down.
Place the battery on the charger to charge and reset it.

TRANSPORTING LITHIUM BATTERIES

Lithium-ion batteries are subject to the Dangerous Goods Legislation requirements.

Transportation of those batteries has to be done in accordance with local, national and international provisions and regulations.

- The user can transport the batteries by road without further requirements.
- Commercial transport of Lithium-Ion batteries by third parties is subject to Dangerous Goods regulations. Transport preparation and transport are exclusively to be carried out by appropriately trained persons and the process has to be accompanied by corresponding experts.

When transporting batteries:

- Ensure that battery contact terminals are protected and insulated to prevent short circuit.
- Ensure that battery pack is secured against movement within packaging.
- Do not transport batteries that are cracked or leak.

Check with forwarding company for further advice

MAINTENANCE

Refer to the ONE-KEY App for information regarding necessary servicing.

Use only Milwaukee accessories and spare parts. Should components need to be replaced which have not been described, please contact one of our Milwaukee service agents (see our list of guarantee/service addresses).

If needed, an exploded view of the tool can be ordered. Please state the machine type printed as well as the six-digit No. on the label and order the drawing at your local service agents or directly at: Techtronic Industries GmbH, Max-Eyth-Straße 10, 71364 Winnenden, Germany.

SYMBOLS

	CAUTION! WARNING! DANGER!
	Remove the battery pack before starting any work on the machine.
	Please read the instructions carefully before starting the machine.
	Do not swallow the coin cell battery!
	Do not dispose electric tools, batteries/rechargeable batteries together with household waste material. Electric tools and batteries that have reached the end of their life must be collected separately and returned to an environmentally compatible recycling facility. Check with your local authority or retailer for recycling advice and collection point.
n_0	No-load speed
IPM	Impact range
V	Volts
	Direct current
	European Conformity Mark
	British Confomity Mark
	Ukraine Conformity Mark
	EurAsian Conformity Mark

Copyright 2021
Techtronic Industries GmbH
Max-Eyth-Str. 10
71364 Winnenden
Germany
+49 (0) 7195-12-0
www.milwaukeetool.eu

Techtronic Industries (UK) Ltd
Fieldhouse Lane
Marlow Bucks SL7 1HZ
UK

(08.21)
4100 4703 43