

no. 21583
UNIDRILL 28
Ø 10 - 28 mm
3/8" - 1 1/8"

no. 21575
UNIDRILL 42
Ø 10 - 42mm
3/8" - 1 5/8"

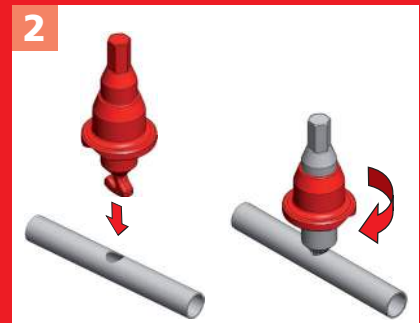

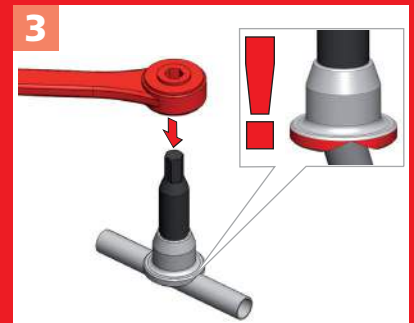

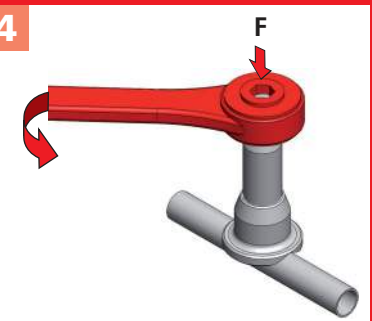

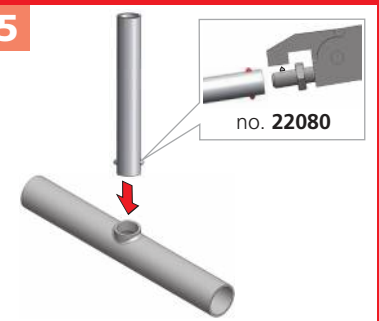

Cu ≧ 260 N/mm²



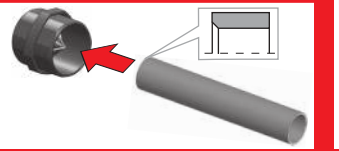

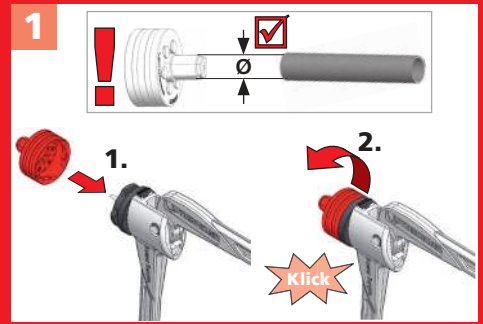

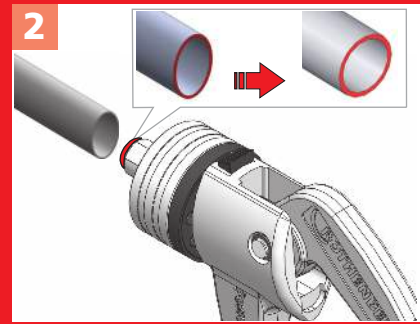

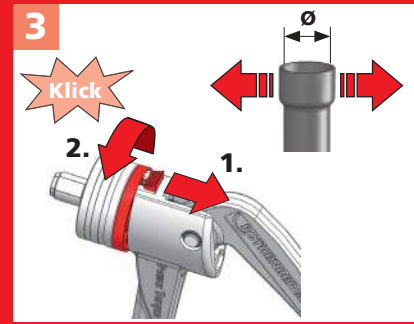

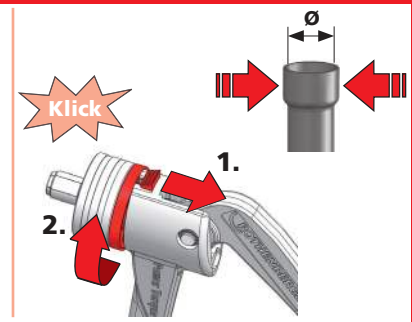

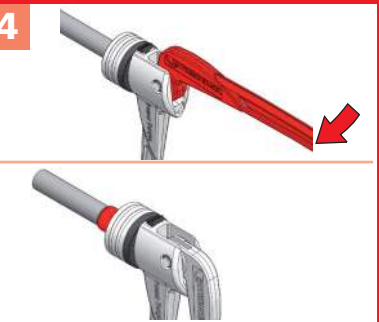

ROTHENBERGER Werkzeuge GmbH • Industriestraße 7 • D-65779 Kelkheim/Germany
Tel. + 49 (0) 61 95 / 800 - 0 • Fax +49 (0) 61 95 / 800 - 3500 • info@rothenberger.com • www.rothenberger.com

ROTHENBERGER

1300001604-I0/F&E