DREMEL® 565/566

PO Box 3267
4800 DG Breda, The Netherlands
www.dremel.com

1

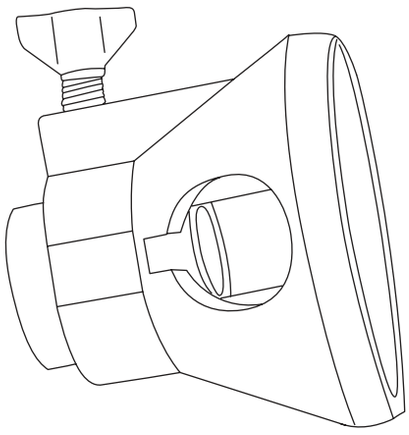

2

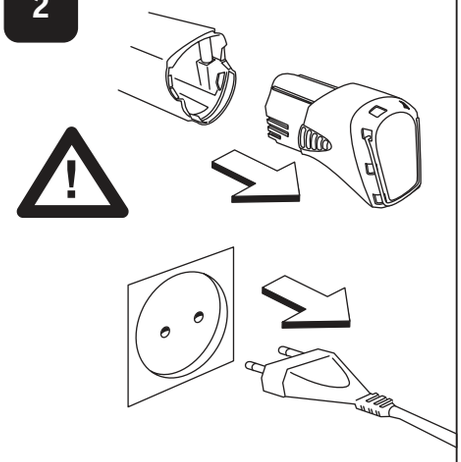

3

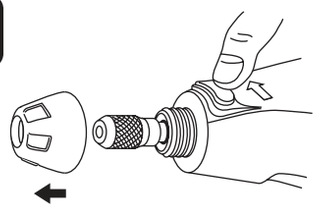

4

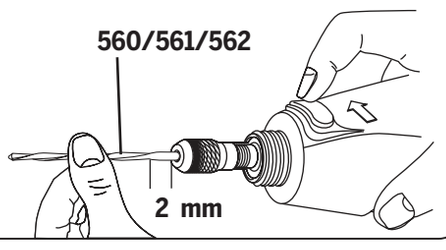

5

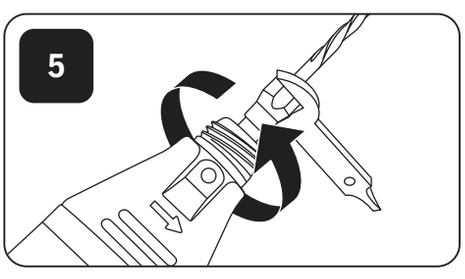

6

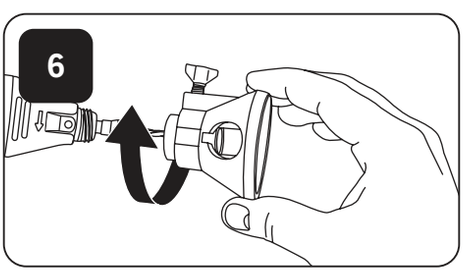

7

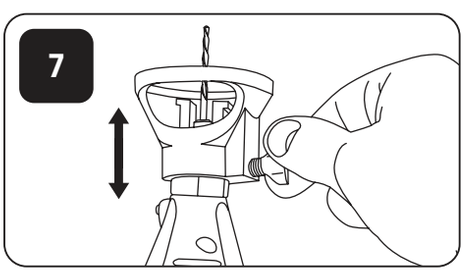

8

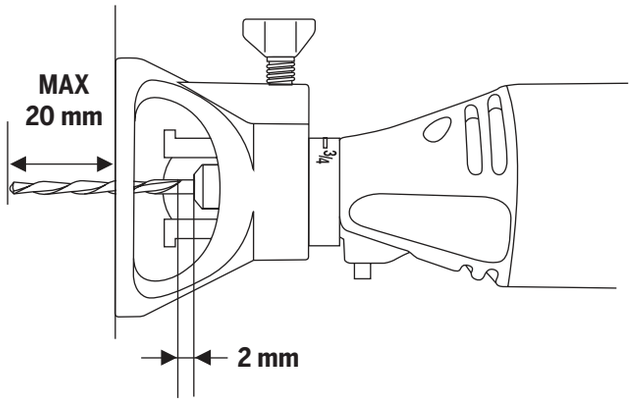

9

