Product: **KLUDI STANDARD shower mixer DN 15**

Ref.: **2610105 ..**

Product description

shower mixer DN 15
choice of handle
handle Terralux metal (08)
handle Terralux ABS (15)
wall fastening
distance from center to center 120 mm
flow class B
S unions
shower outlet G 1/2
protected against back flow
without shower set
noise group I
KIWA

Finishes:
05 chrome

Advertisement

* KLUDI GmbH & Co KG KLUDI STANDARD shower mixer item no. 261010508/15
** classic headparts, DIN EN 200
*** chrome plated brass, DIN 50930-6

shower mixer, manufacturer KLUDI GmbH & Co KG KLUDI STANDARD shower mixer item no. 261010508 / 261010515, DN 15, chrome plated brass, type: shower mixer DN 15, handle projection 50 mm, noise level DIN EN 4109 group I, without report no., KIWA NL approval, flow class B (max. 0,42 l/s), projection 55 mm, S unions 3/8 x 1/2 inch, classic headparts, handles marked: red / blue, shower outlet 1/2 inch, protected against back flow, distance form center to center 120 mm, choice of handle: 08 = handle Terralux chrome plated metal, 15 = handle Terralux ABS chrome plated plastic, for pressure type water heater, for continuous line heater, PN 10,

Product picture



Dimensional drawing

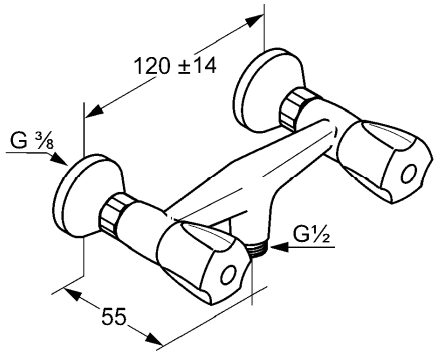

Flow rate diagram

