Technische Daten/ Technical Data

KLUDI BOZZ
concealed single lever basin mixer
DN 15

Ref.: 382453976

Finishes:
39 matt black

Product description
Manufacturer KLUDI GmbH & Co. KG
Typ: KLUDI BOZZ
concealed single lever basin mixer
Ref.: 382453976

concealed single lever basin mixer
projection 230mm
trim set without pre-installation set
for pre-installation set KLUDI Ref.: 38243
wall mounted
solid lever, metal
aerator, S-Pointer M24 PCA
flow rate at 3 bar 5 l/min.
fixed spout
EU taxonomy: max. 6 l/min. -
Substantial Contribution (SC) possible

Produktabbildung/ Product picture



Maßzeichnung/ Dimensional drawing

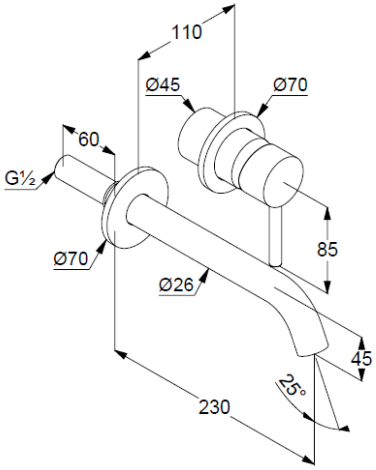

Durchfluss/ Flow rate

