Technische Daten/ Technical Data

KLUDI BOZZ
single lever shower mixer
DN 15

Ref.: 388313976

Finishes:
39 matt black

Product description
Manufacturer KLUDI GmbH & Co. KG
Typ: KLUDI BOZZ
single lever shower mixer
Ref.: 388313976

shower mixer
single lever mixer
wall mounted
solid lever, metal
protected against back flow
shower outlet G1/2
ceramic cartridge with hot water safety device
flow rate at 3 bar 28 l/min.
S-unions G1/2 x G3/4

Produktabbildung/ Product picture



Maßzeichnung/ Dimensional drawing

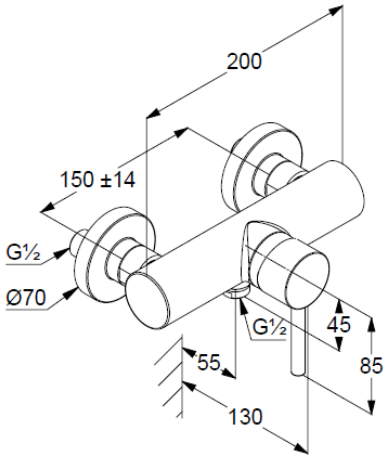

Durchfluss/ Flow rate

