Technische Daten/ Technical Data

KLUDI AMEO
single lever basin mixer
DN 15

Ref.: 412450575

Finishes:
05 chrome

Product description
Manufacturer KLUDI GmbH & Co. KG
Typ: KLUDI AMEO
basin mixer
Ref.: 412450575

basin mixer
concealed basin mixer
single lever mixer
trim set without pre-installation set KLUDI Ref.: 38242
wall mounted
fixed spout 235mm
solid lever, metal
aerator, S-Pointer M24 PCA
flow rate at 3 bar 5 l/min.
EU taxonomy: max. 6 l/min. -
Substantial Contribution (SC) possible

Produktabbildung/ Product picture



Maßzeichnung/ Dimensional drawing

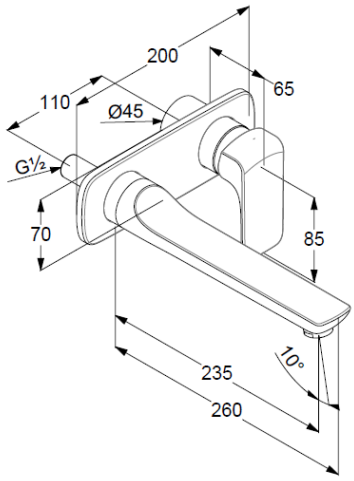

Durchfluss/ Flow rate

