Technische Daten/ Technical Data

KLUDI BALANCE
electronic controlled basin mixer
DN 15

Ref.: 5220005

Finishes:
05 chrome

Product description
Manufacturer KLUDI GmbH & Co. KG
Typ: KLUDI BALANCE
electronic controlled basin mixer
Ref.: 5210005

basin mixer
electronic controlled with 6V Lithium Battery CR-P2
1-hole mounted
mixing shaft with temperature handle
optical object registration
aerator M24 PCA
protected against back flow
flow rate at 3 bar 5 l/min.
flexible hoses G3/8 DVGW approved
with integrated back flow preventer
rapid installation set
activation optoelectronical
maximum water run-time 2 minutes
safety class IP65
EU taxonomy: max. 6 l/min. -
Substantial Contribution (SC) possible

Produktabbildung/ Product picture



Maßzeichnung/ Dimensional drawing

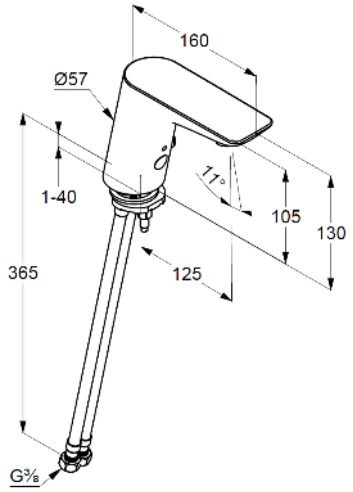

Durchfluss/ Flow rate

