Technische Daten/ Technical Data

KLUDI SUPARAFLEX
shower hose
DN 15

Ref.: 6107205-00

Finishes:
05 chrome

Product description
Manufacturer KLUDI GmbH & Co. KG
Typ: KLUDI SUPARAFLEX
shower hose
Ref.: 6107205-00

shower hose
plastic coated
with metal-effect
with conical nuts
anti twist
G1/2 x G1/2 x 1600mm

Produktabbildung/ Product picture



Maßzeichnung/ Dimensional drawing

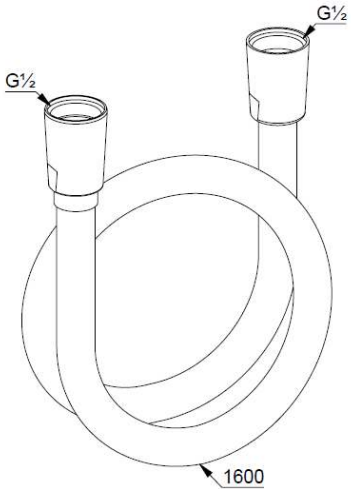

Durchfluss/ Flow rate