SET LAUFEN PRO S

Countertop basin
81096.4





TECHNICAL DATA

Order no.	81096.4
Certified to	EN 31
Dimensions	650 x 465 mm
Inside dimensions of the basin	600 x 310 mm
Specification	Charge 104 – 1 centre tap hole
Special specification	Charge 108 – 3 tap holes Charge 109 – without tap hole Charge 111 – 1 centre tap hole, without overflow Charge 112 – without tap holes, without overflow Charge 136 – 3 tap holes, distance 8 inches Charge 142 – without tap hole, without overflow and without open drain Charge 156 – 1 centre tap hole, without overflow and without open drain Charge 158 – 3 tap holes, without overflow
Weight	17,5 kg
Accessories excl.	Siphon cover, order no. 81996.3 (3 tap holes not possible) Pedestal, order no. 81996.2
Mounting acc. excl.	Mounting set M10 x 140 mm, order no. 89988.2
Colours	see colour table

SPECIFICATION TEXT

Countertop basin LAUFEN PRO S, sanitary ceramic
EN 31, dimensions 650 x 465 mm, angular
1 centre tap hole
Special feature: overflow channel glazed
Further options / accessories: Surface refinement LCC (only white), 3 tap holes, without tap holes, 1 tap hole without overflow, without tap holes and overflow, 3 tap holes distance 8 inches, without tap holes/ overflow and open drain, 1 tap hole/without overflow and open drain, 3 tap holes without overflow, siphon cover, pedestal, bathtubs, furniture
Order no. 81096.4

TECHNICAL DRAWINGS / S 1 : 20

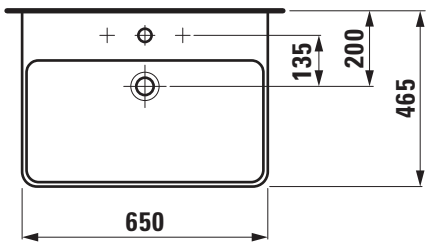

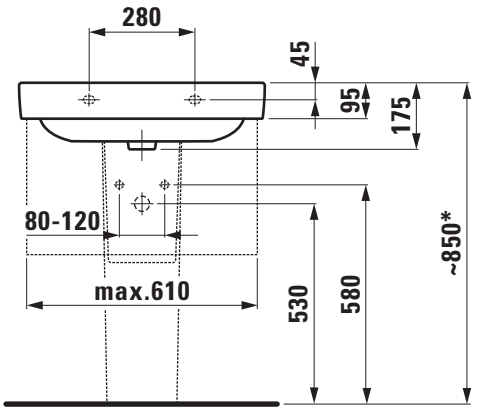

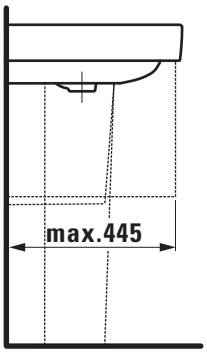

* = Effective height must be fixed according to the height of the pedestal.