SET LAUFEN PRO S

Double countertop basin
81496.6



TECHNICAL DATA

Order no.	81496.6
Certified to	EN 31
Dimensions	1200 x 465 mm
Inside dimensions of the basin	per basin 500 x 295 mm
matching for	Vanity unit Laufen Pro S, order no. 48356.3, 48356.4
Specification	Charge 104 – per basin 1 centre tap hole per basin 1 overflow
Special specification	Charge 108 – per basin 3 tap holes per basin 1 overflow Charge 109 – without tap holes per basin 1 overflow Charge 136 – per basin 3 tap holes, distance 8 inches
Weight	
Accessories excl.	Siphon cover, order no. 81996.3 (3 tap holes not possible) Pedestal, order no. 81996.2 Towel rack, order no. 38596.3
Mounting acc. excl.	2x Mounting set M10 x 140 mm, order no. 89988.2
Colours	see colour table

SPECIFICATION TEXT

Double countertop basin LAUFEN PRO S, sanitary ceramic
EN 31, dimensions 1200 x 470 mm, angular
per basin 1 centre tap hole
Special feature: overflow channel glazed
Further options / accessories: Surface refinement LCC (only white), per basin 3 tap holes, without tap holes, per basin 3 tap holes distance 8 inches, siphon cover, pedestal, towel rack, bathtubs, vanity unit, furniture
Order no. 81496.6

TECHNICAL DRAWINGS / S 1 : 20

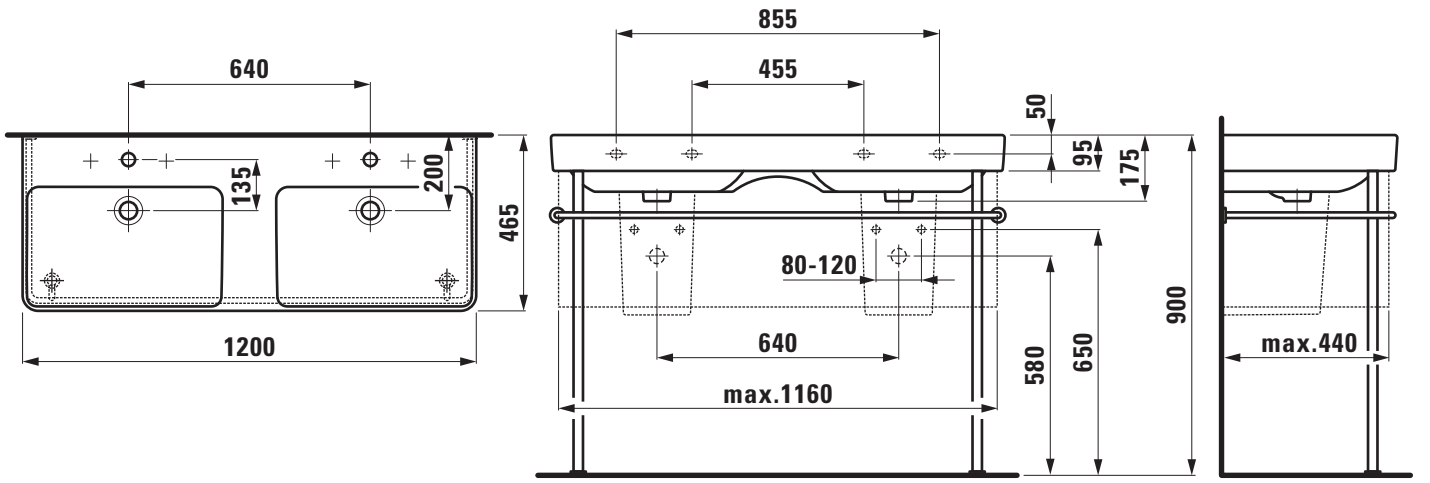

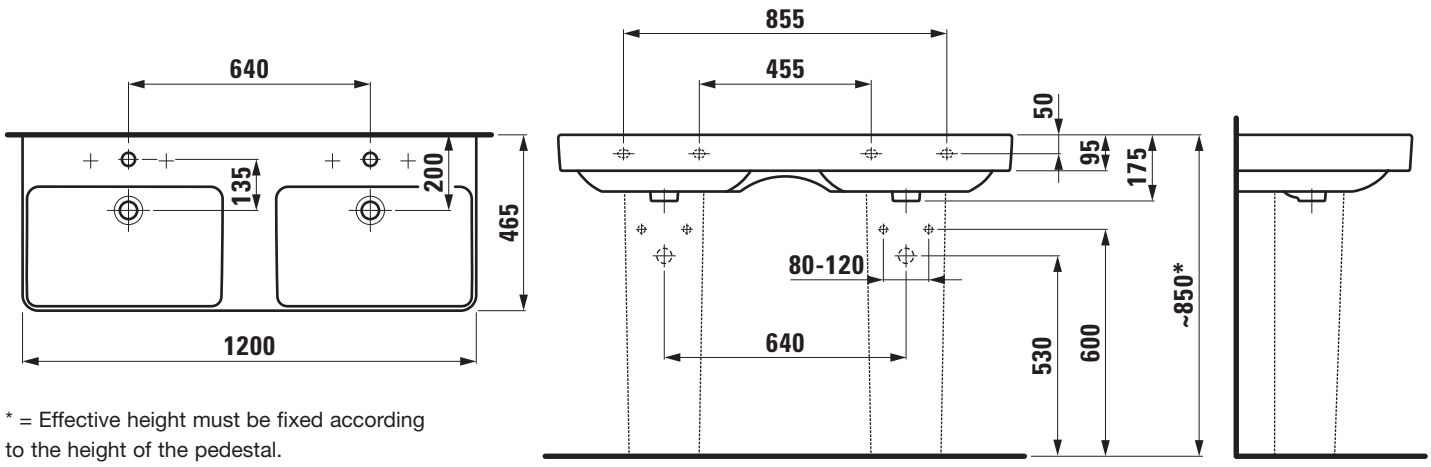

* = Effective height must be fixed according to the height of the pedestal.

LAUFEN