Technical Data

KLUDI L-INE
Kitchen faucet
DN 15

Ref.:
428210577

Finishes:
05 chrome

Product description
Manufacturer KLUDI GmbH & Co. KG
Typ: KLUDI L-INE
Kitchen faucet DN 15
Ref.: 428210577
Kitchen faucet DN 15
single lever mixer
with pull out telescopic spout
with horizontal guidance
single hole mounted
solid lever, metal
lateral actuation
Aerator M24 PCA, laminar
protected against back flow
ceramic cartridge
flow rate at 3 bar = 7,5 l/ min.
swivel spout (220°)
flexible hoses G 3/8 DVGW approved
shank-fixing
extractable hoses M12 x 1500 mm

Product picture



Dimensional drawing

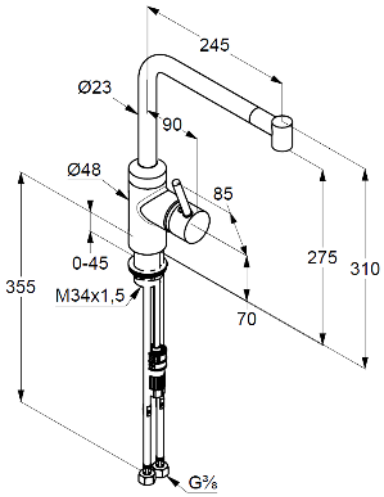

Flow rate diagram

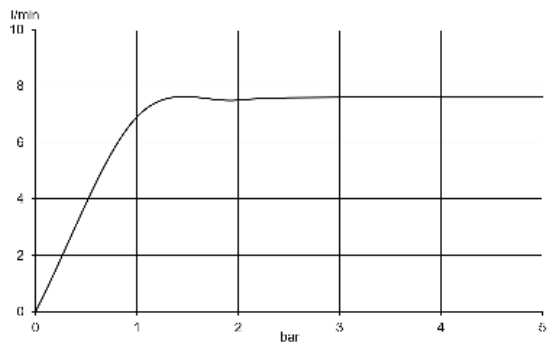

KLUDI
WATER IN PERFECTION