Technische Daten/ Technical Data

KLUDI NOVA FONTE
basin mixer
DN 15
Style: Déco

Ref.:
201180539

Finishes:
05 chrome

Product description
Manufacturer KLUDI GmbH & Co. KG
Typ: KLUDI NOVA FONTE
basin mixer
Ref.: 201180539

basin mixer
2-handle mixer
1-hole mounted
Y-handle, metal
aerator M18,5 PCA laminar
ceramic headparts 90° (right/left)
flow rate at 3 bar 5,6 l/min.
swivel (150°/360°) or fixable spout
flexible hoses G⅜ DVGW approved
shank-fixing
pop up waste G1¼ metal

Produktabbildung/ Product picture



Maßzeichnung/ Dimensional drawing

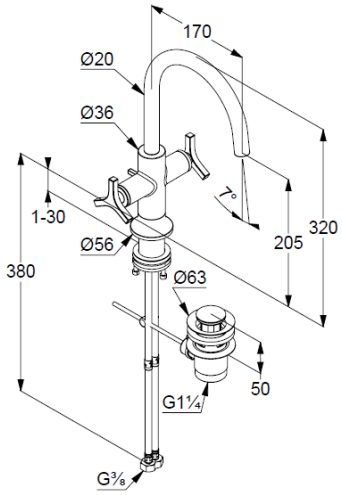

Durchfluss/ Flow rate

