Technische Daten/ Technical Data

KLUDI NOVA FONTE
bath-and shower mixer
DN 15
Style: Puristic

Ref.: 205405315

Finishes:
53 matt white

Product description
Manufacturer KLUDI GmbH & Co. KG
Typ: KLUDI NOVA FONTE
bath-and shower mixer
Ref.: 205405315

bath-and shower mixer
2-handle mixer
wall mounted
automatic diverter: shower/bath
wing handle, metal
aerator, S-Pointer M24
protected against back flow
shower outlet G1/2
ceramic headparts 90° (right/left)
flow rate at 3 bar 23 l/min.
S-unions G1/2 x G3/4

Produktabbildung/ Product picture



Maßzeichnung/ Dimensional drawing

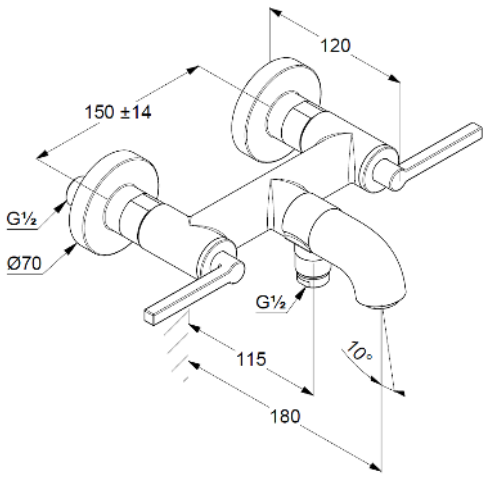

Durchfluss/ Flow rate

