GEBERIT

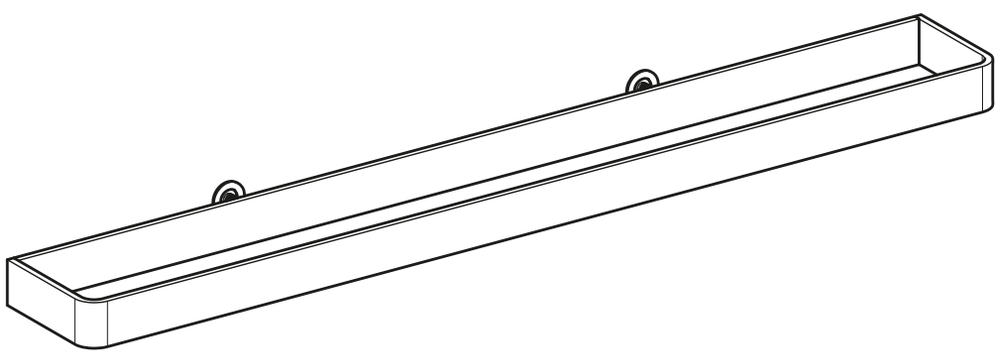

# INSTALLATION MANUAL

MONTAGEANLEITUNG
INSTRUCTIONS DE MONTAGE
ISTRUZIONI PER IL MONTAGGIO

KNOW HOW INSTALLED

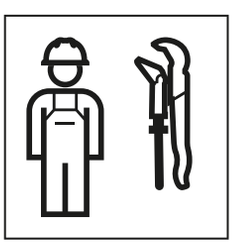

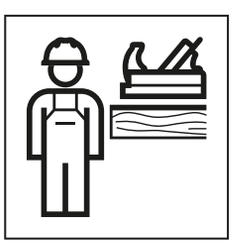

970.264.00.0(00)





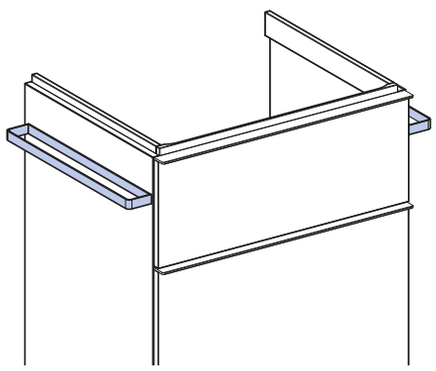

## 1

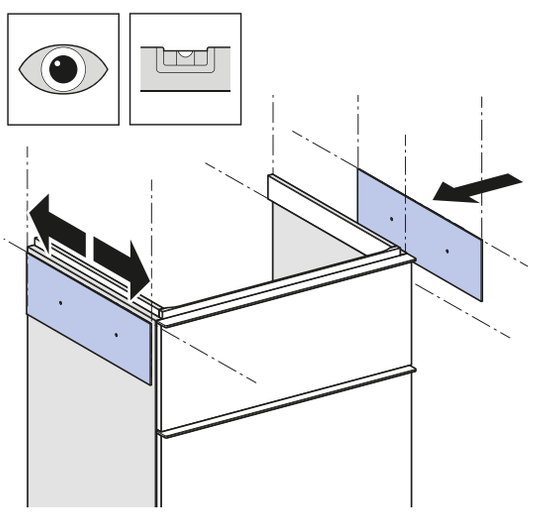

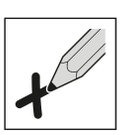

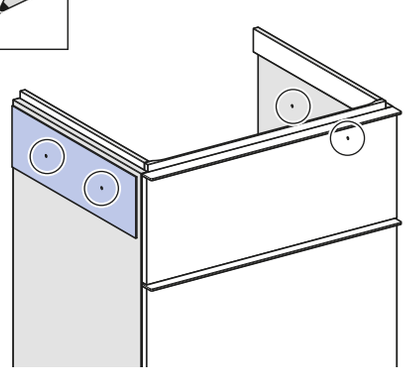

## 2



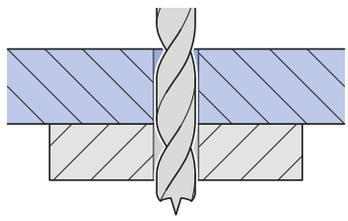



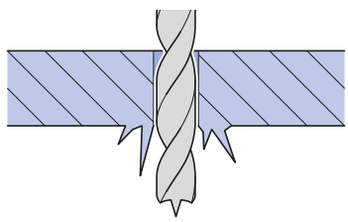

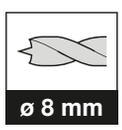


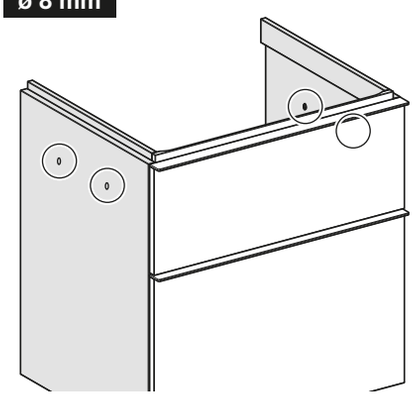

## 3

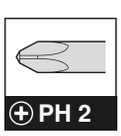


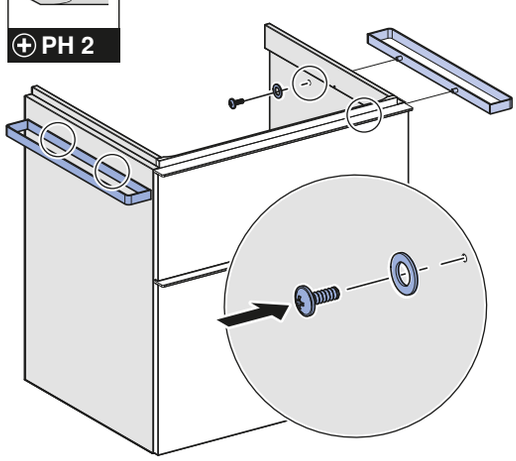

**Geberit International AG**
**Schachenstrasse 77, CH-8645 Jona**
**documentation@geberit.com**
**www.geberit.com**



8189457675 © 02-2021
970.264.00.0(00)