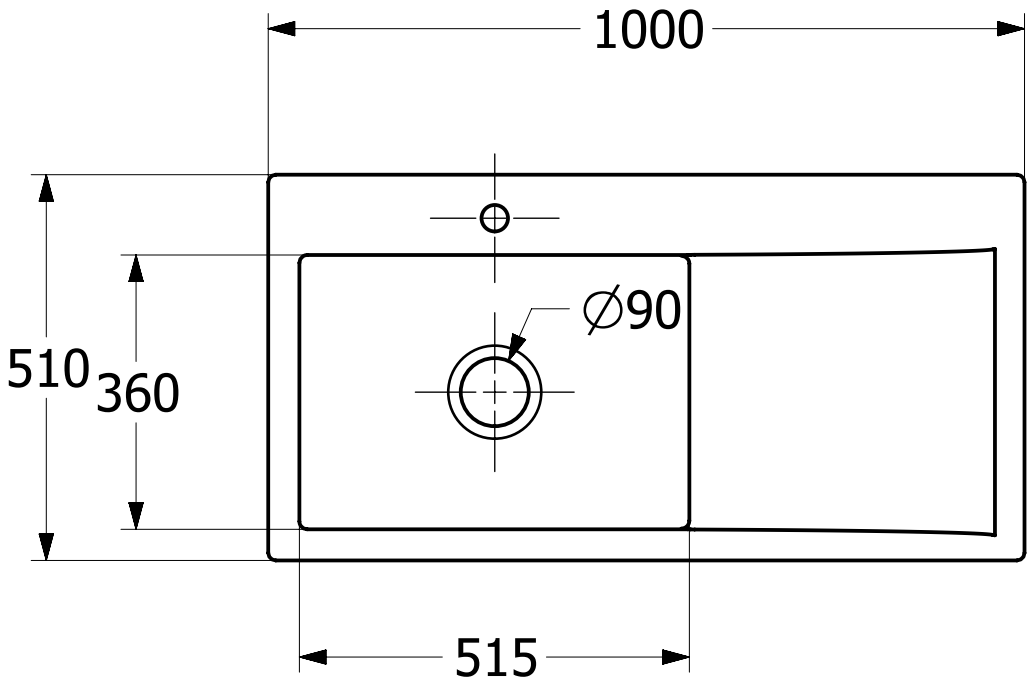

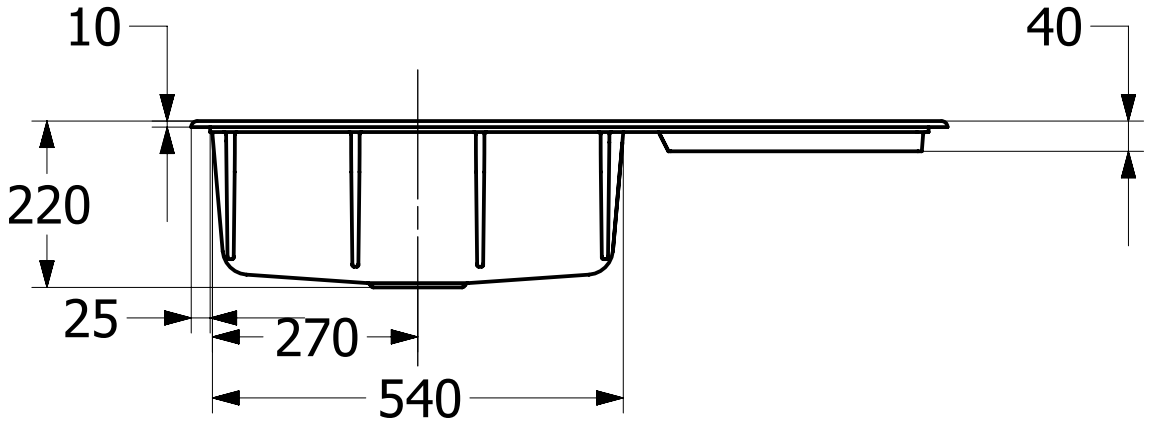

SUBWAY STYLE 60 336200 336201 336202	Villeroy & Boch 1748
V04 /10.06.2024	