Technische Daten/ Technical Data

KLUDI BOZZ
concealed single lever bath-and shower mixer

Ref.: 387595376

Finishes:
53 matt white

Product description
Manufacturer KLUDI GmbH & Co. KG
Typ: KLUDI BOZZ
concealed single lever bath-and shower mixer
Ref.: 387595376

concealed bath-shower mixer
single lever mixer
trim set without pre-installation set
for pre-installation set KLUDI SLIM.BOXX Ref.: 88022
trim set with functional unit
wall mounted
PUSH&SWITCH diverter
automatic diverter: shower/bath
solid lever, metal
ceramic cartridge with hot water safety device
flow rate bath at 3 bar 28 l/min.
flow rate shower at 3 bar 24 l/min.

Produktabbildung/ Product picture



Maßzeichnung/ Dimensional drawing

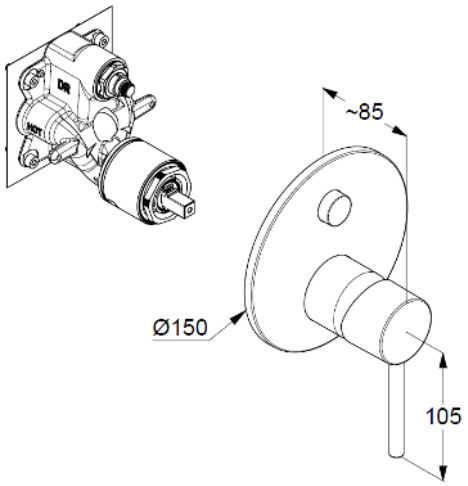

Durchfluss/ Flow rate

