Technische Daten/ Technical Data

KLUDI BOZZ
concealed single lever shower mixer

Ref.: 387550576

Finishes:
05 chrome

Product description
Manufacturer KLUDI GmbH & Co. KG
Typ: KLUDI BOZZ
concealed single lever shower mixer
Ref.: 387550576

concealed shower mixer
single lever mixer
trim set without pre-installation set
for pre-installation set KLUDI SLIM.BOXX Ref.: 88022
trim set with functional unit
wall mounted
solid lever, metal
ceramic cartridge with hot water safety device
flow rate at 3 bar 28 l/min.

Produktabbildung/ Product picture



Maßzeichnung/ Dimensional drawing

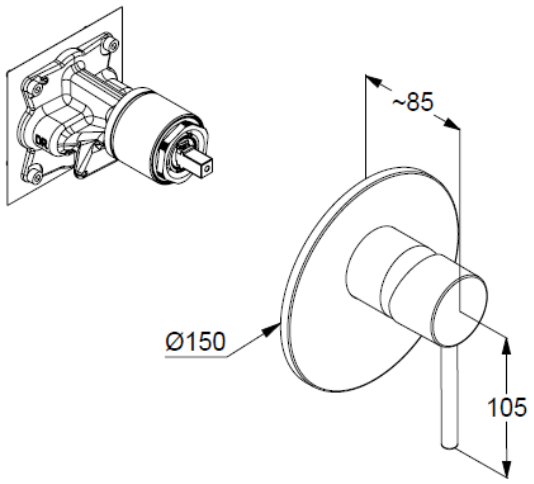

Durchfluss/ Flow rate

