# ROBEND 18 mm 24518 (24518)

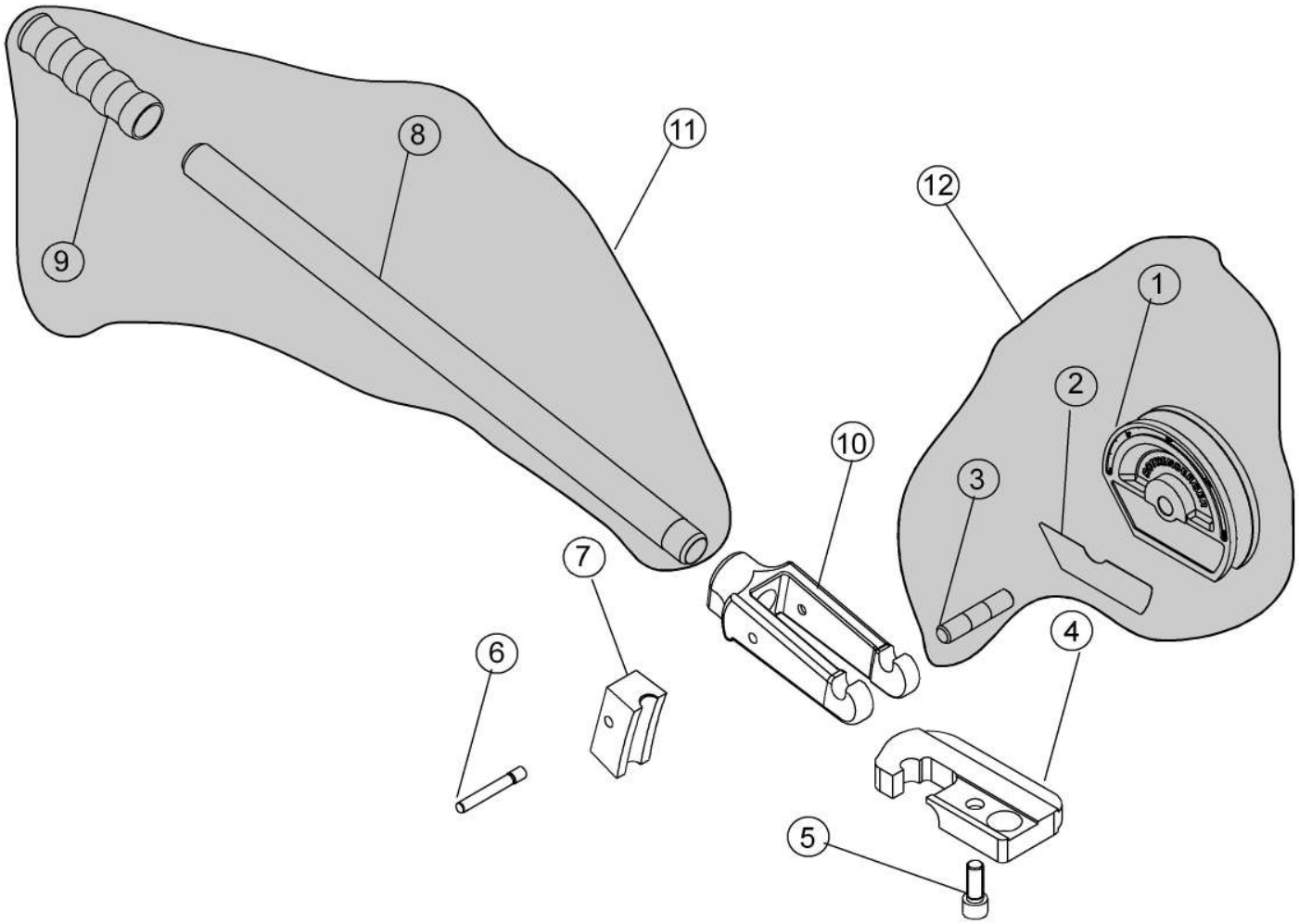

# ROBEND 18 mm 24518 (24518)

| Pos. | Artikelnr. | Bezeichnung | Menge |
|---|---|---|---|
| 1 | F82618 | ROB.SEGMENT 18 H+W PLUS | 1 |
| 2 | F82127 | Robend Achse D.67x14mm Gr.4 | 1 |
| 3 | F92335 | ETIKETT F.ROB.SEGM. 18 H+W | 1 |
| 4 | F82518 | Robendplatte H+W Plus 18mm | 1 |
| 5 | F88426 | SCHRAUBE M 12 X 30 MM DIN | 1 |
| 6 | F88063 | ROB. BOLZEN GR.16-18 | 1 |
| 7 | 25318 | Gleitschuh ROLUB f. ROBEND H+W, 18mm | 1 |
| 8 | 025078H | ROBEND-GRIFFROHR 3/4"X520MM | 1 |
| 9 | F98970 | PVC Handgriff Ø 26 mm | 1 |
| 10 | F82833 | Robend Gabel 16/18 | 1 |
| 11 | 25078 | Robend H+W Griff (18-22 mm) | 1 |
| 12 | F82536 | SEGMENT ROBEND H+W PLUS 18mm | 1 |