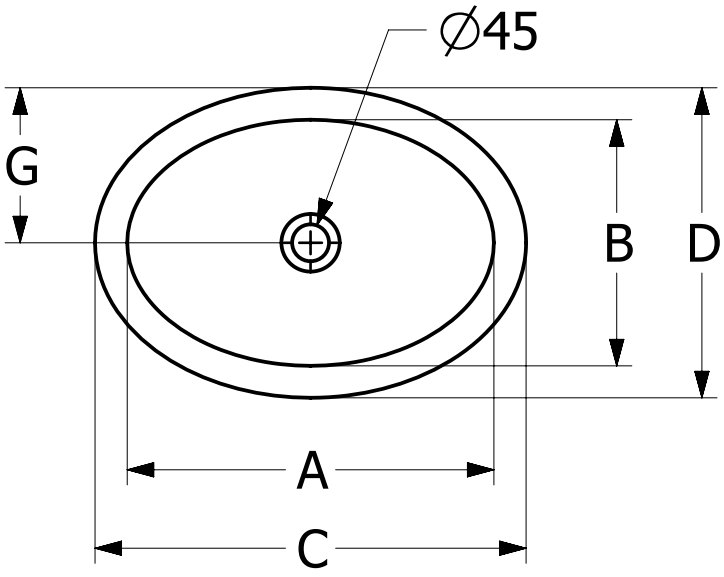


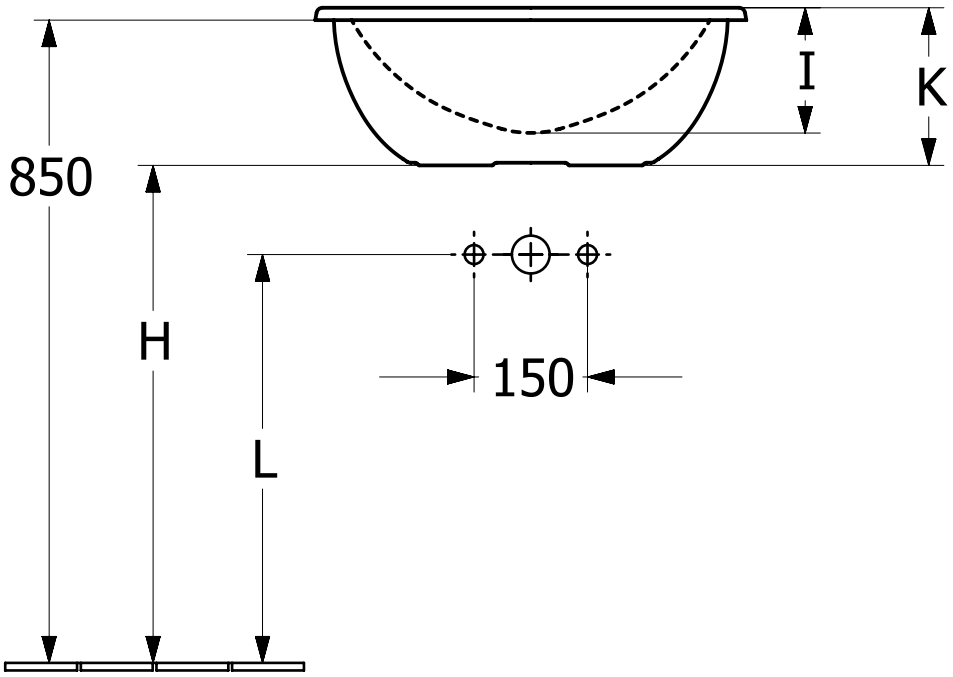


| | A | B | C | D | G | H | I | K | L |
|---|---|---|---|---|---|---|---|---|---|
| 4A6100 | 430 | 290 | 505 | 365 | 180 | 670 | 140 | 185 | 550 |
| 4A6101 | 430 | 290 | 505 | 365 | 180 | 670 | 140 | 185 | 550 |
| 4A6200 | 485 | 325 | 570 | 410 | 205 | 660 | 160 | 205 | 540 |
| 4A6201 | 485 | 325 | 570 | 410 | 205 | 660 | 160 | 205 | 540 |
| 4A6300 | 560 | 380 | 660 | 470 | 235 | 640 | 175 | 225 | 520 |
| 4A6301 | 560 | 380 | 660 | 470 | 235 | 640 | 175 | 225 | 520 |

Loop & Friends
4A6100_4A6101
4A6200_4A6201
4A6300_4A6301

V03 / 25.05.2023

Villeroy & Boch
1748