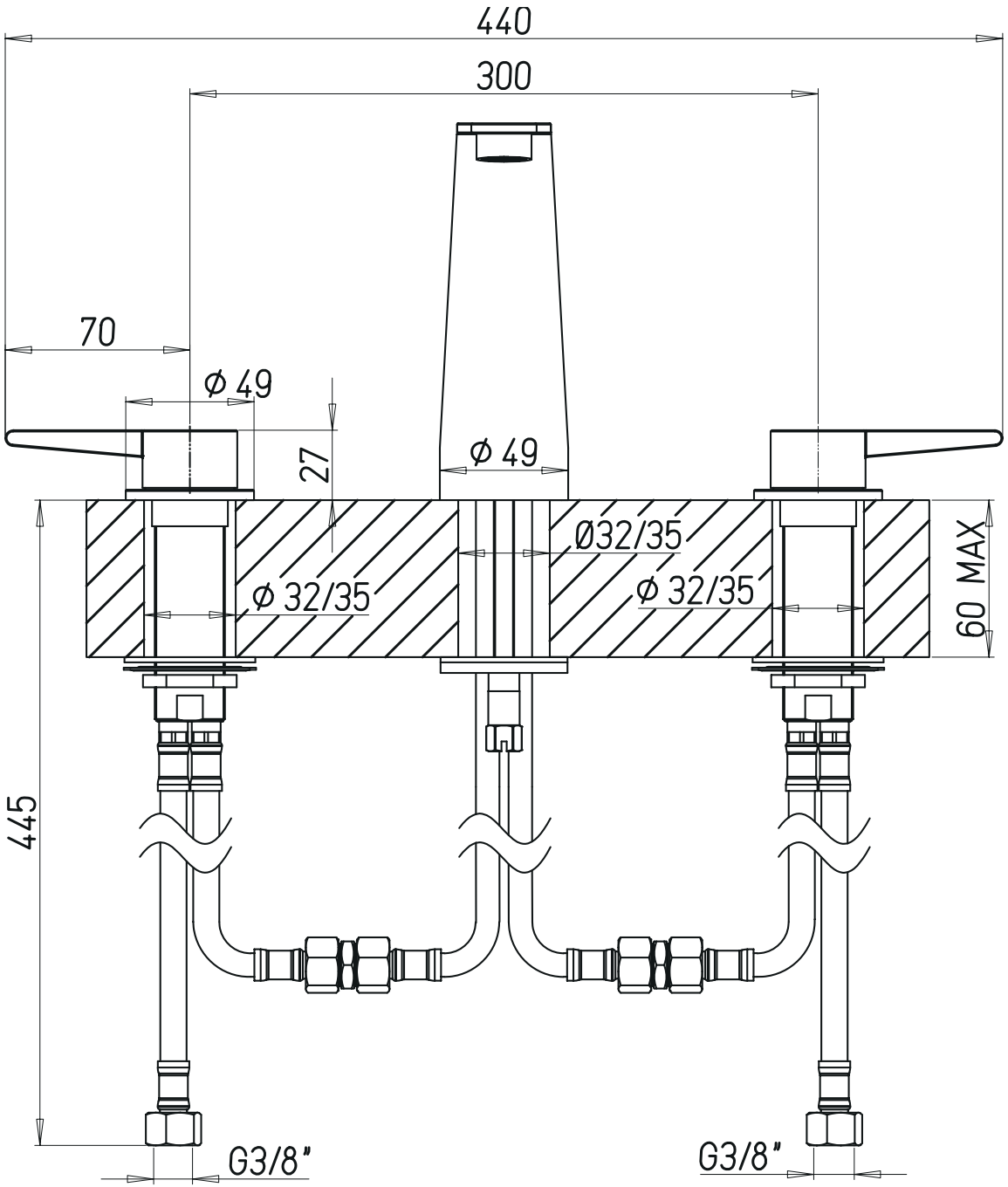

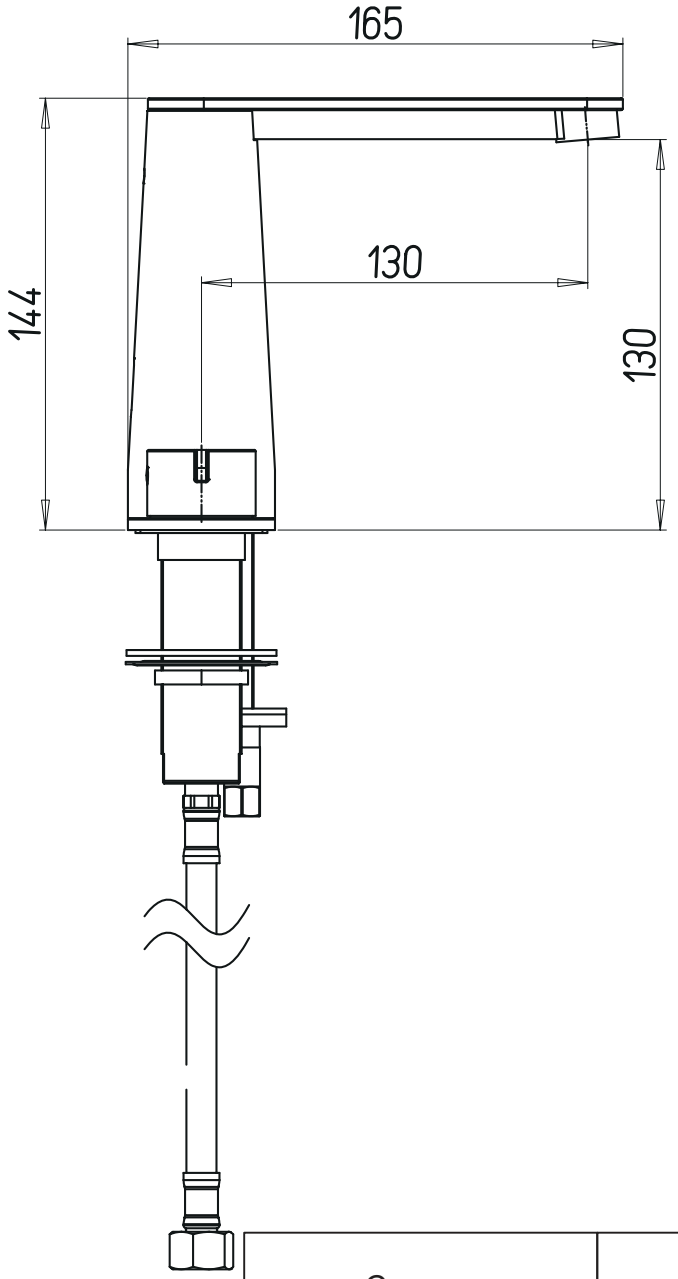

Conum TVW127001001	Villeroy & Boch 1748
V01 / 06.07.2023	