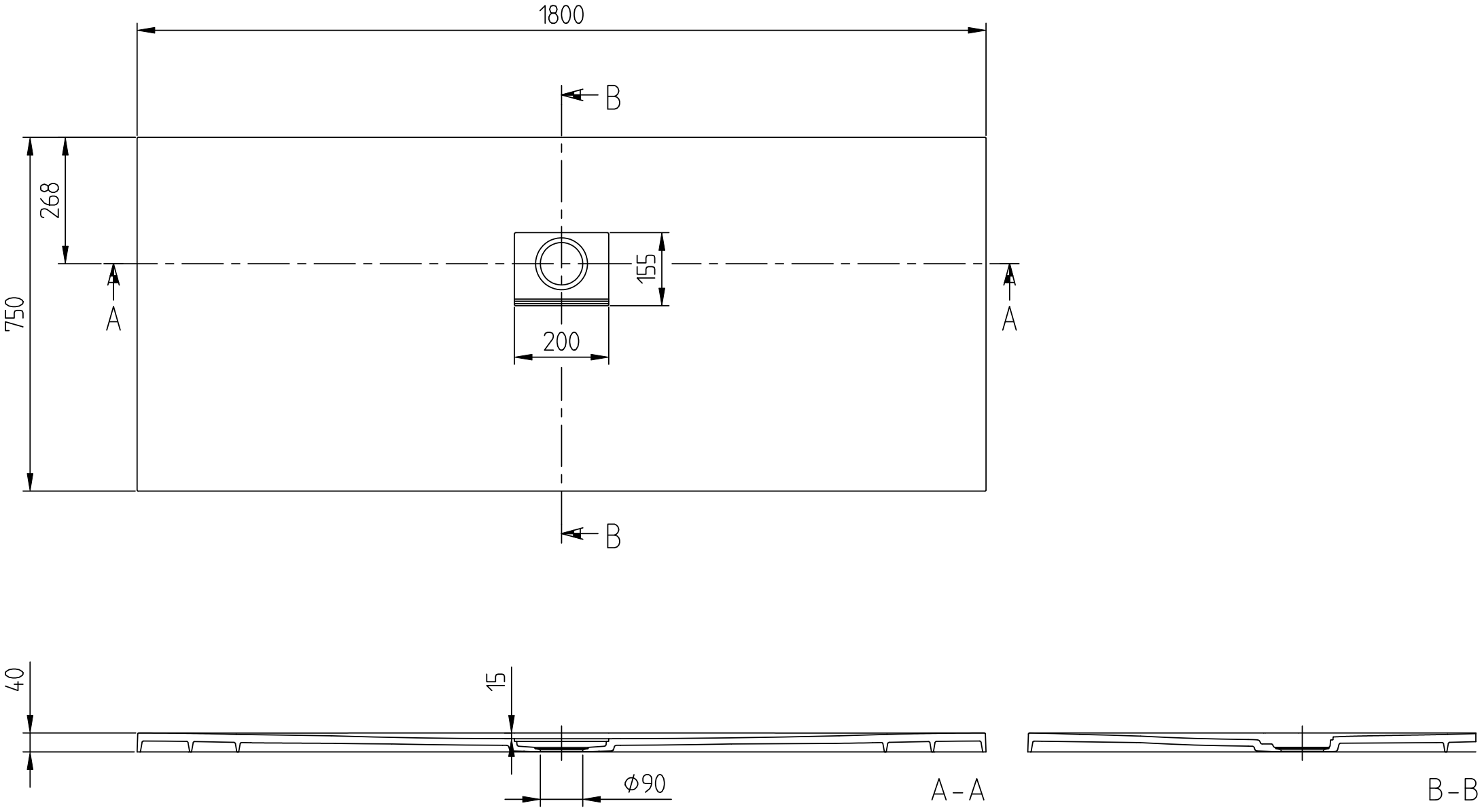


| | |
|---|---|
| SQUARO INFINITY<br>1800x700<br>UDQ1875SQI2B | Villeroy & Boch<br>1748 |
| V02 / 14-05-2020 | |