Technische Daten/ Technical Data

KLUDI-REEF
kitchen faucet
DN 15

Ref.: 508036675

Finishes:
66 deep matt black

Product description
Manufacturer KLUDI GmbH & Co. KG
Typ: KLUDI-REEF
kitchen faucet
Ref.: 508036675

kitchen faucet
single lever mixer
1-hole mounted
solid lever, metal
lateral actuation
aerator M18,5
ceramic cartridge
flow rate at 3 bar 6,5 l/min.
swivel spout (360°)
flexible hoses G3/8 DVGW approved
shank-fixing

Produktabbildung/ Product picture



Maßzeichnung/ Dimensional drawing

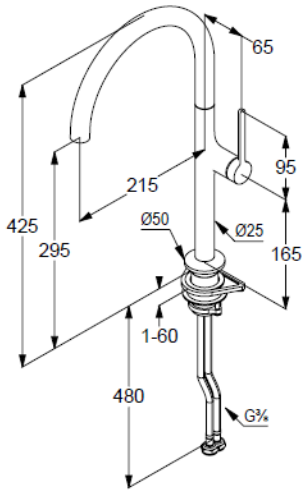

Durchfluss/ Flow rate

