CERATWIST T25+

Ideal Standard

BE237XX

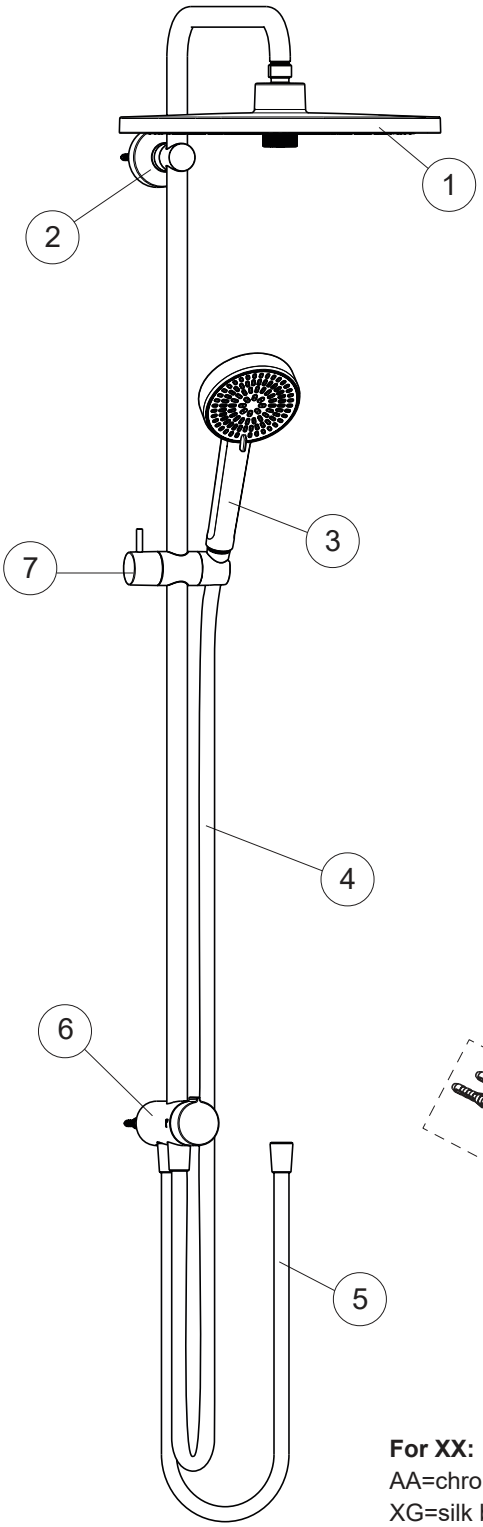

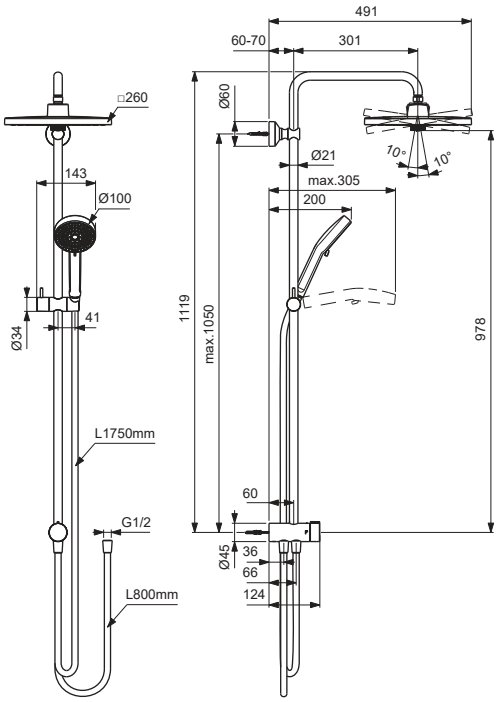

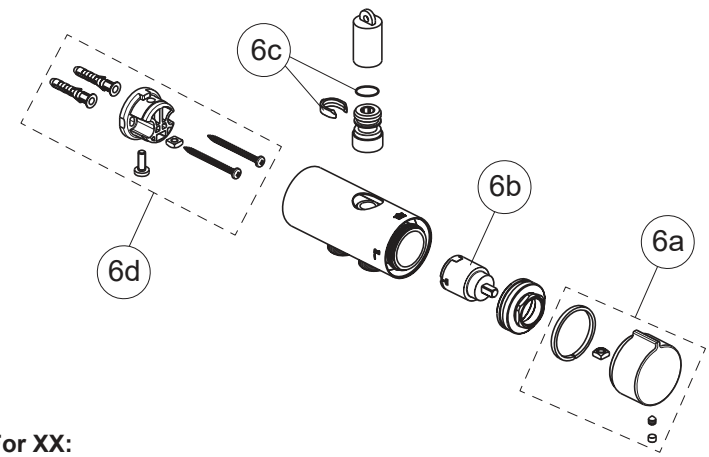

For XX:
AA=chrome
XG=silk black

Pos.	Signify	Spare parts-Nr.	Quantity	Pos.	Signify	Spare parts-Nr.	Quantity
1	Rain shower □260mm	BE223XX	1 Pcs.	7	Slider set	B962015XX	1 Set
2	Shower bar holder	A861562XX	1 Set				
3	Handshower,8 l/min	BD580XX	1 Pcs.				
4	Shower hose 1750mm	BE175XX	1 Pcs.				
5	Shower hose 800mm	B961890XX	1 Pcs.				
6	Exposed diverter	B961798XX	1 Set				
6a	Handle	B962009AA	1 Set				
6b	Diverter cartridge two-way	B962008NU	1 Pcs.				
6c	Sealing set	B962010NU	1 Set				
6d	Wall bracket	B962011NU	1 Set				