ViFlow

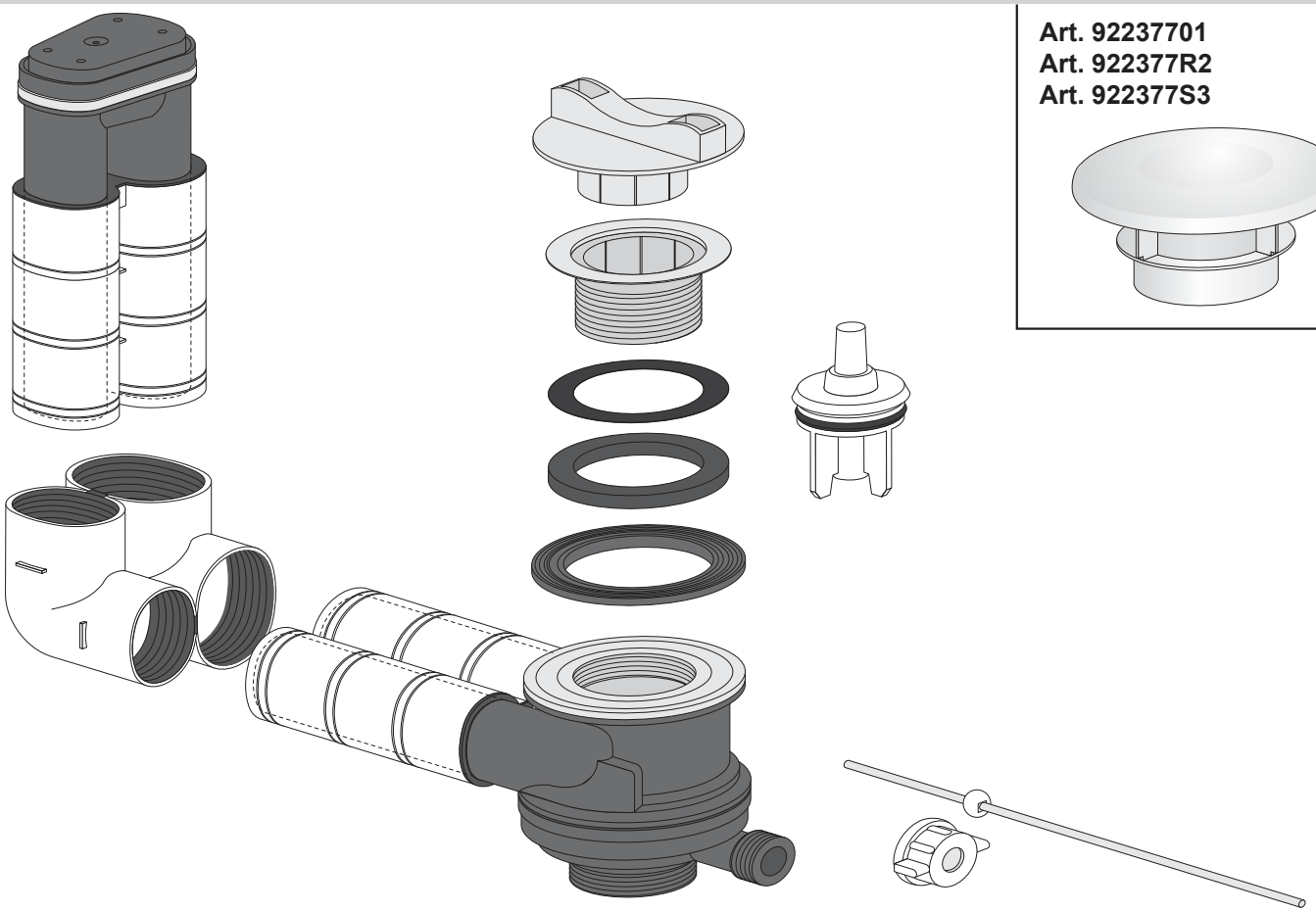

Art. 92237701
Art. 922377R2
Art. 922377S3

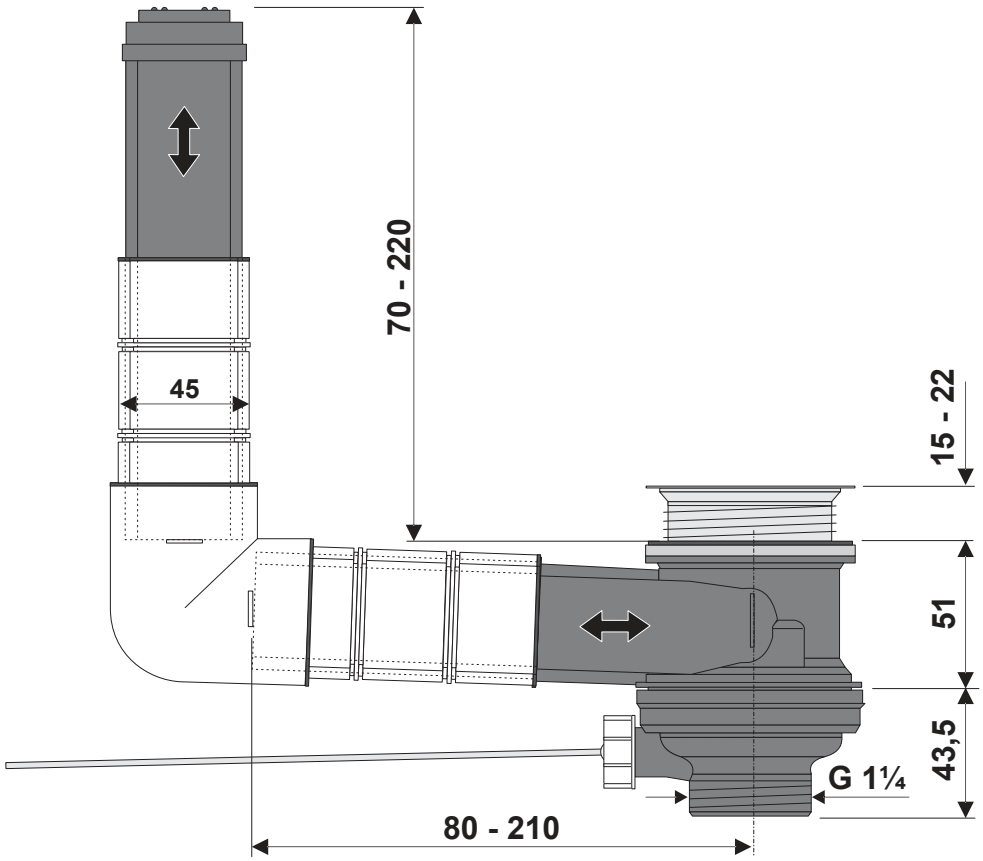

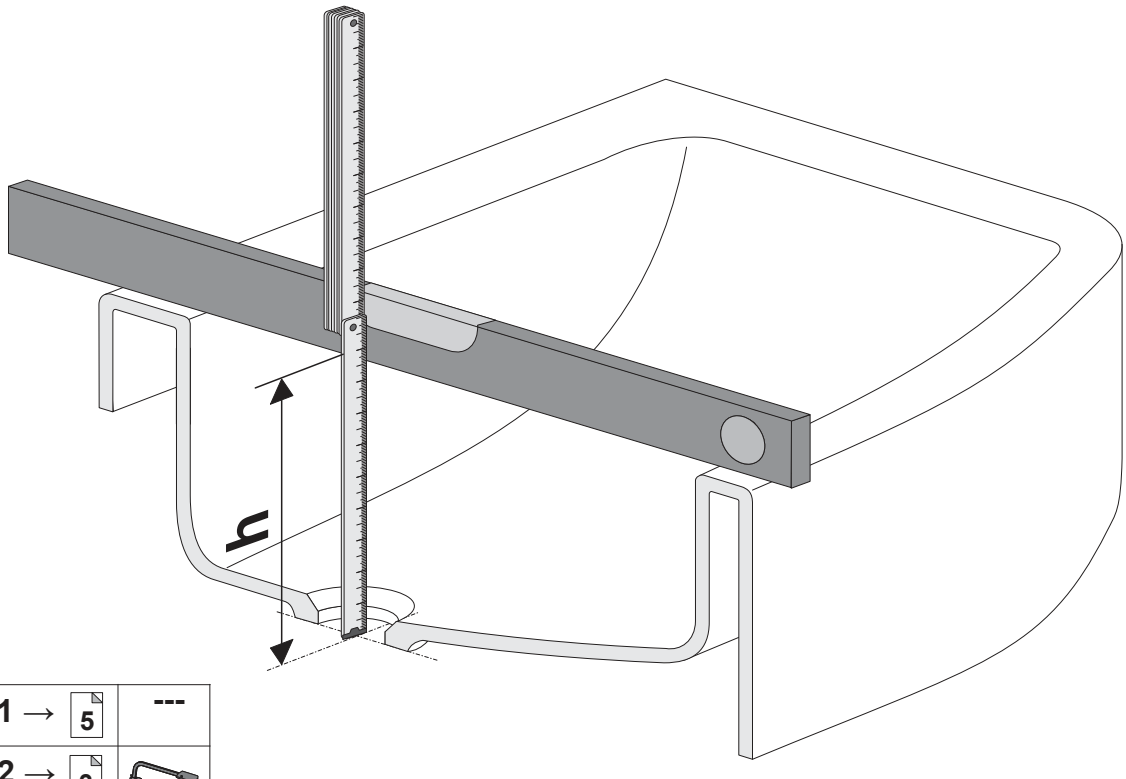

H = 175 - 245 mm	**H1** → 5	---
H = 140 - 175 mm	**H2** → 3	
H = 125 - 140 mm	**H3** → 3	
H = 95 - 115 mm	**H4** → 3	

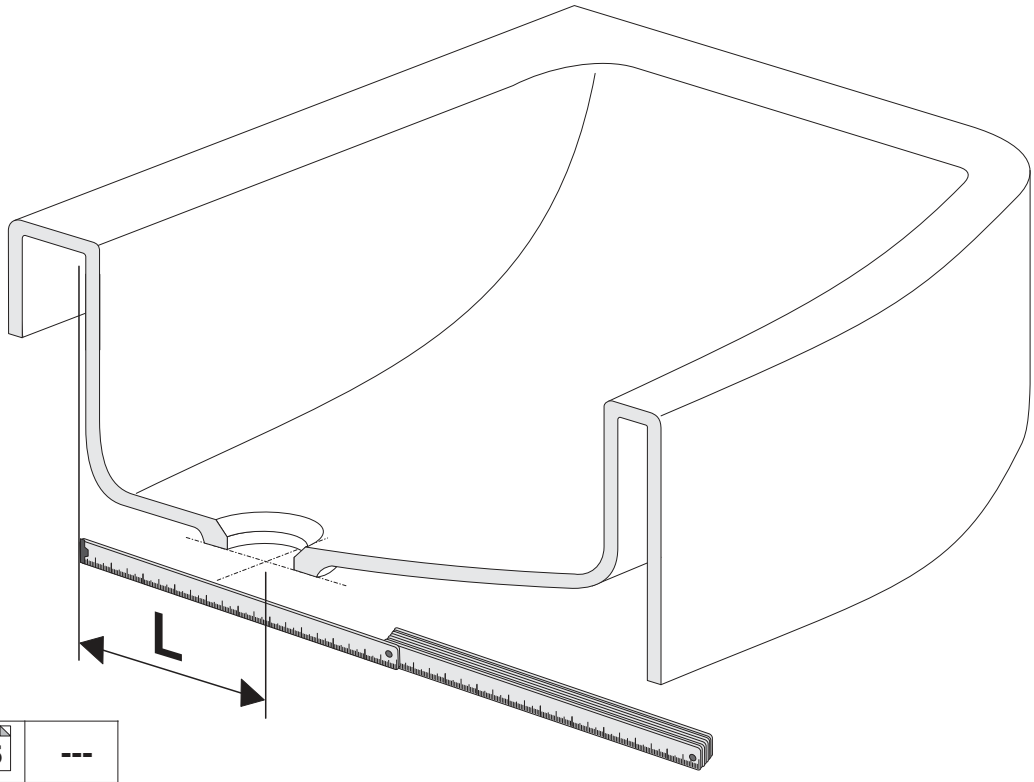

L = 140 - 210 mm	**L1** → 5	---
L = 110 - 140 mm	**L2** → 4	
L = 90 - 110 mm	**L3** → 4	
L = 80 - 100 mm	**L4** → 4	

H2

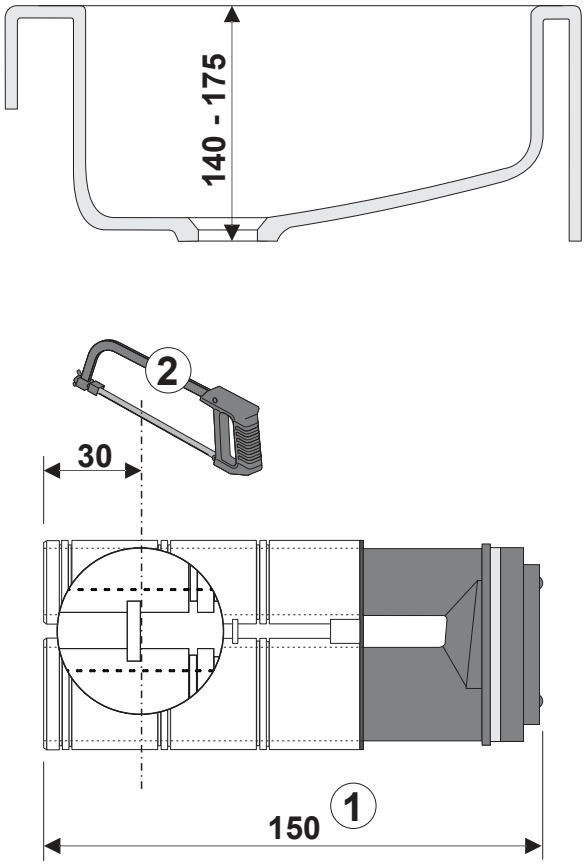

H3

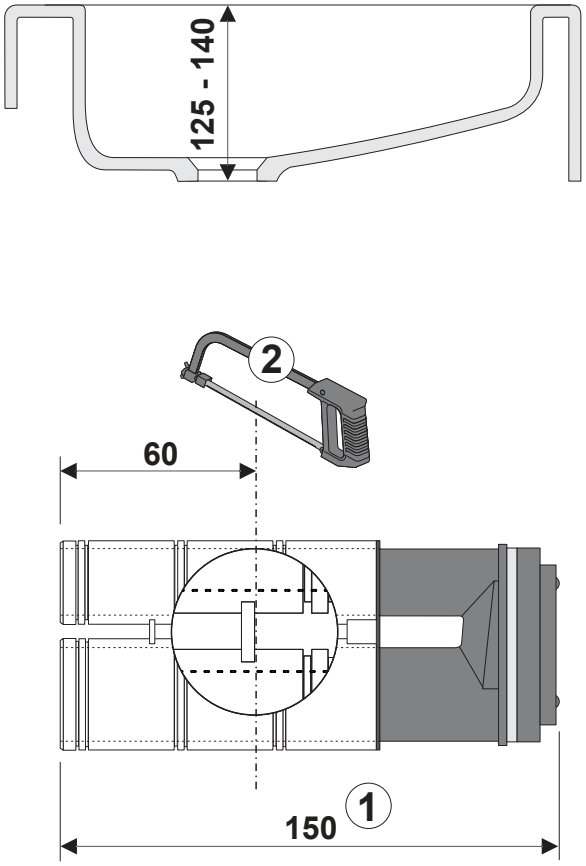

H4

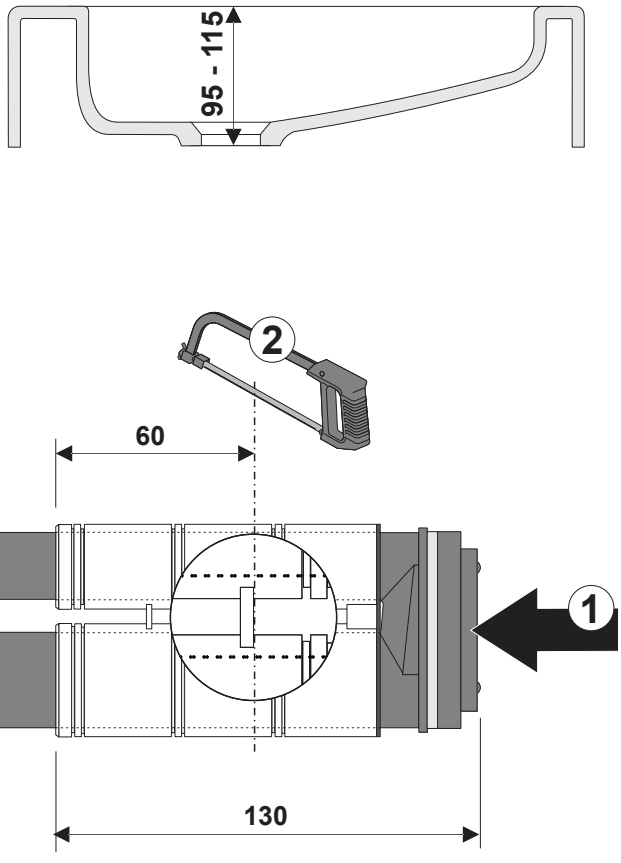

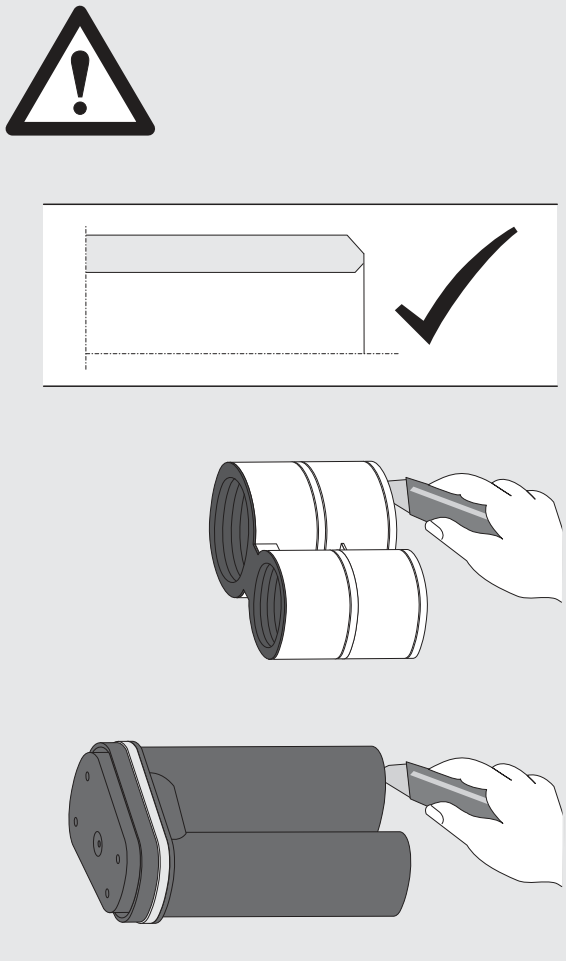

L2

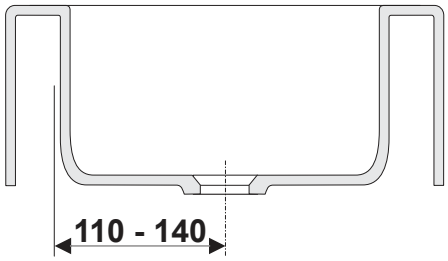

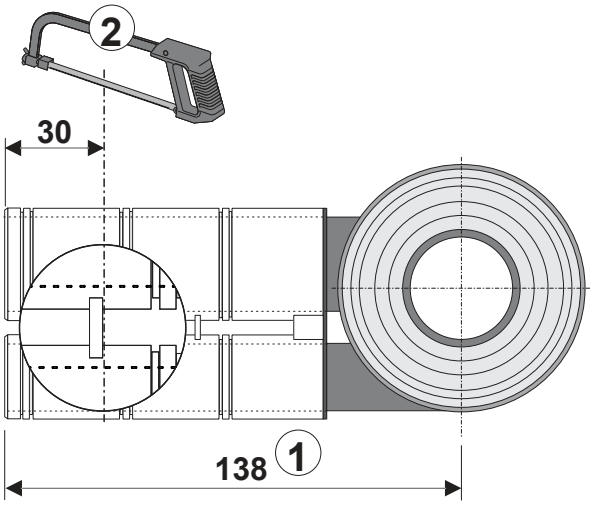

L3

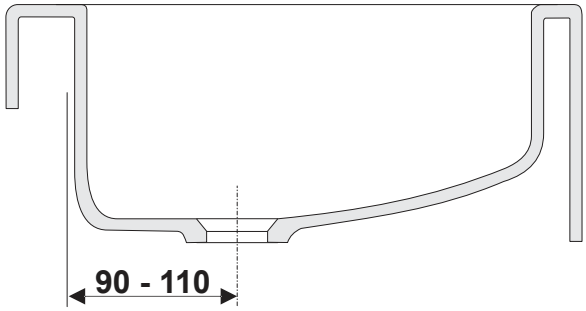

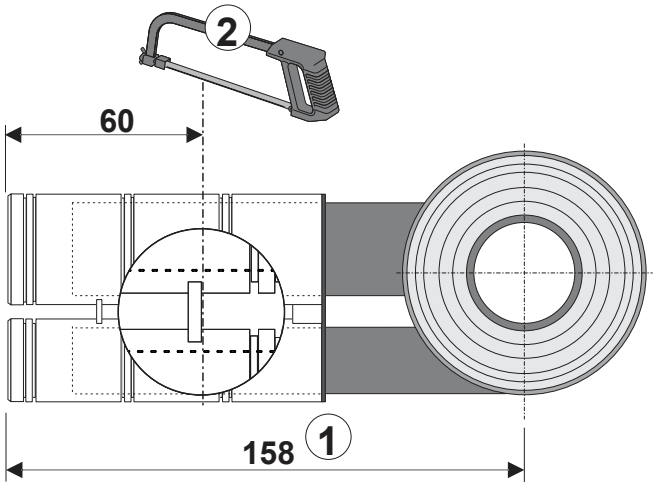

L4

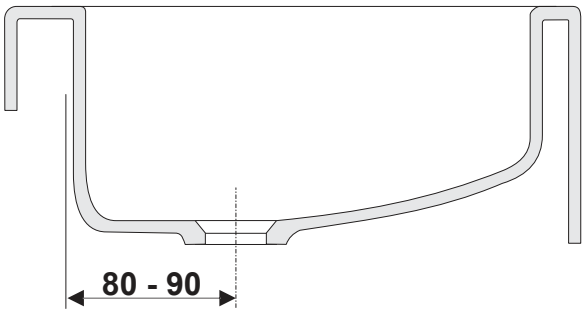

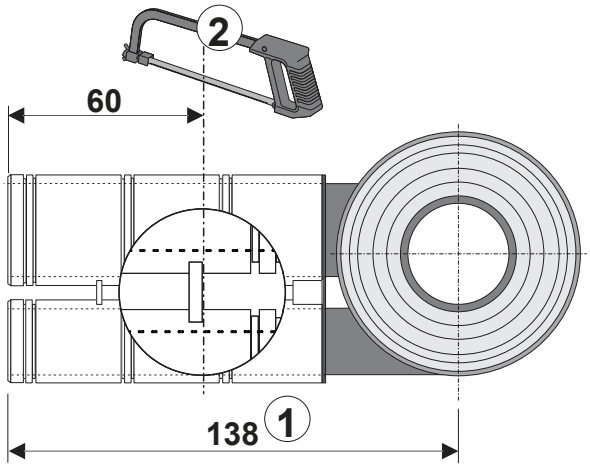



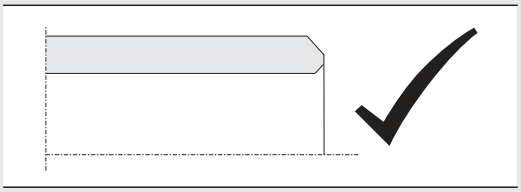

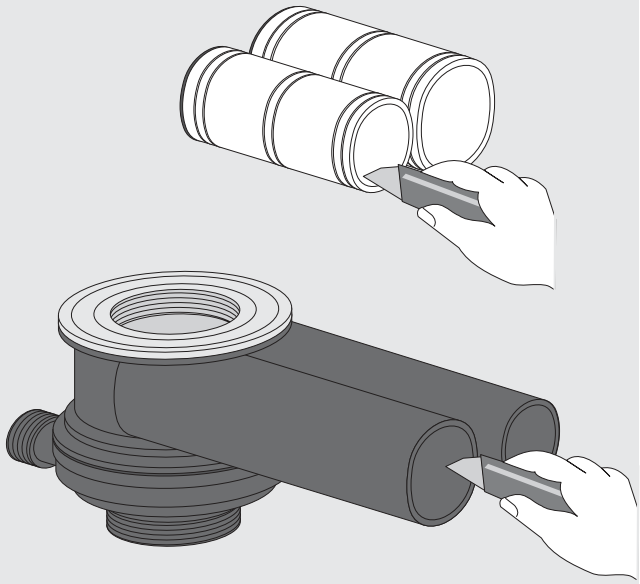

1

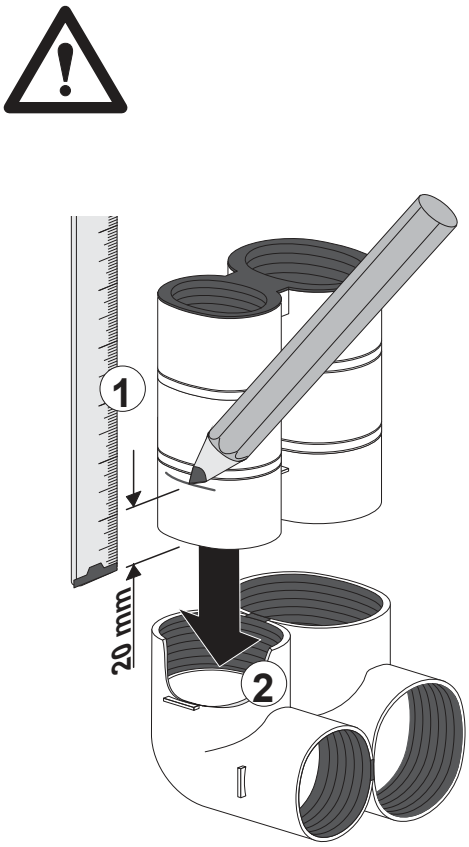

2

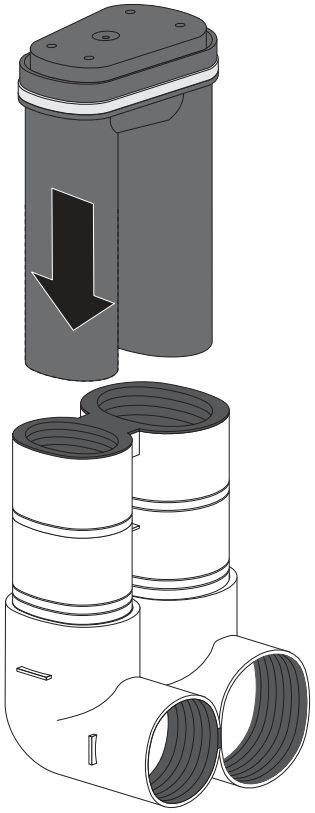

3

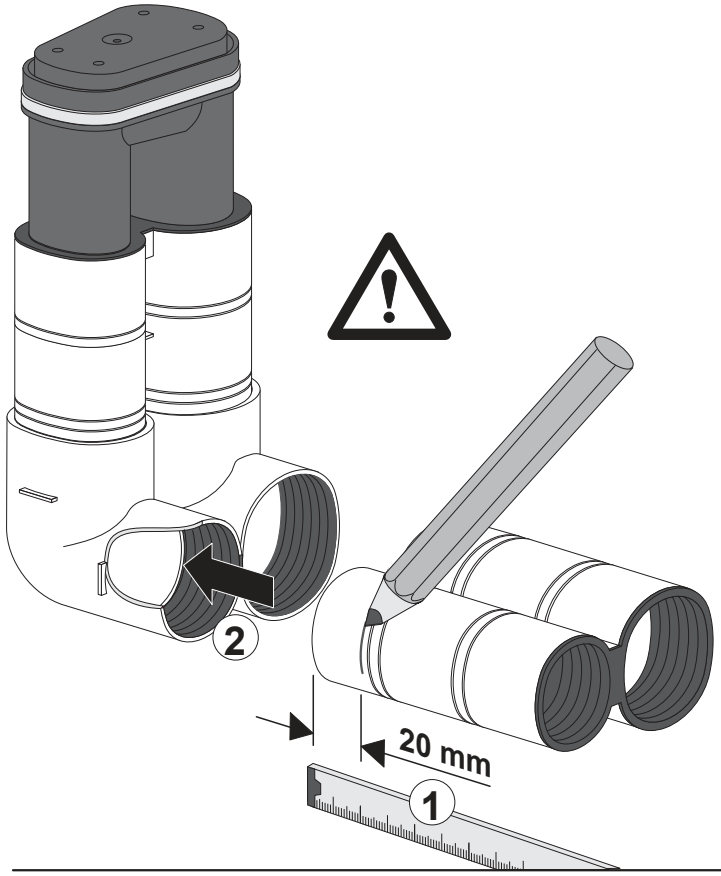

4

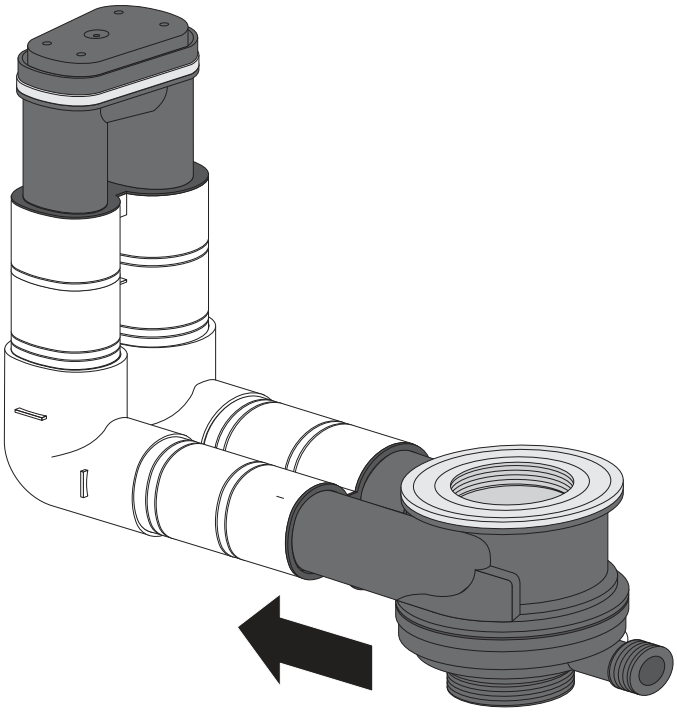

5

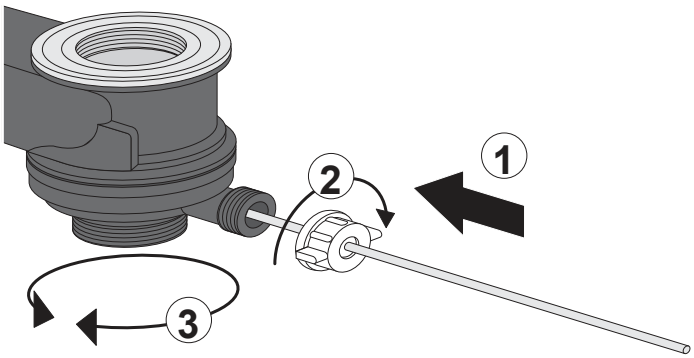

6

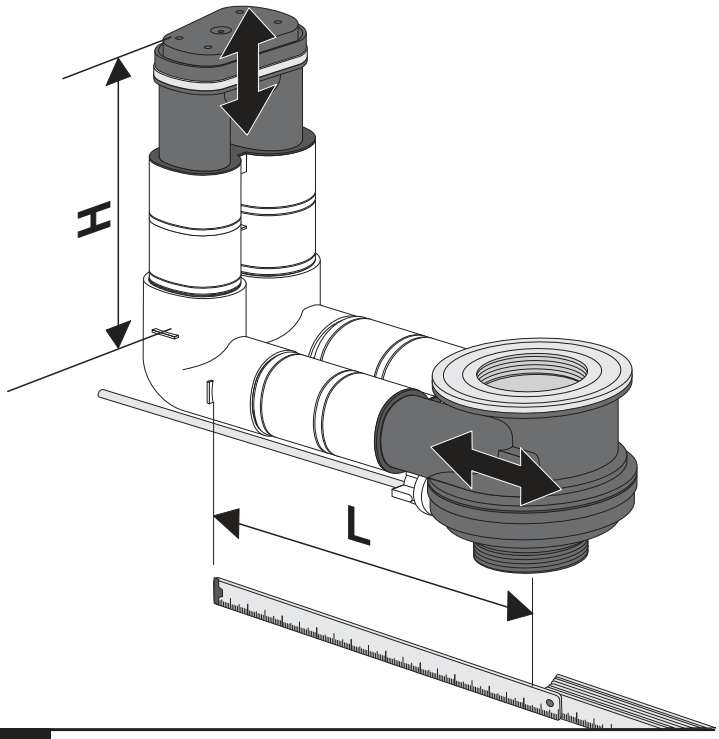

7

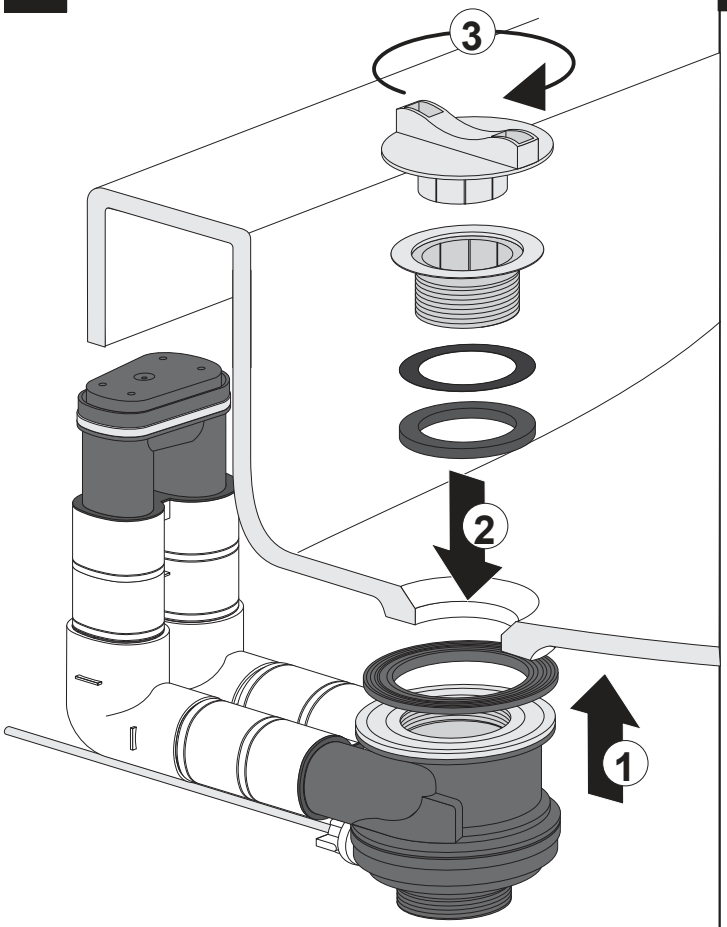

8

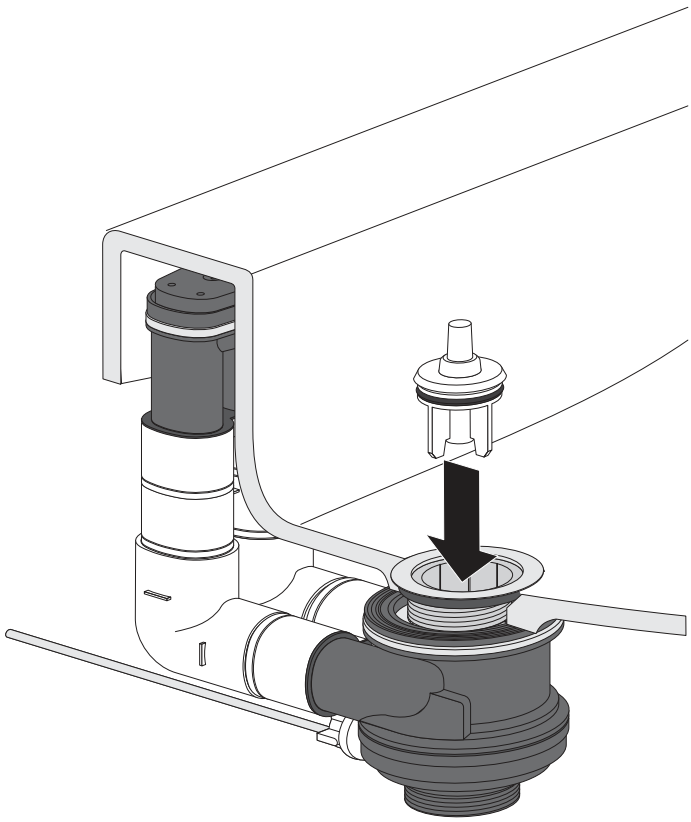

9

