C-line Nuovo A8568AA

Ideal Standard

Produced since: **Jan. 2026**

Pre-installation Kit 1 - **A1000NU**

Body and Designparts Kit 2 :
chrome **A8568AA**
silk black **A8568XG**

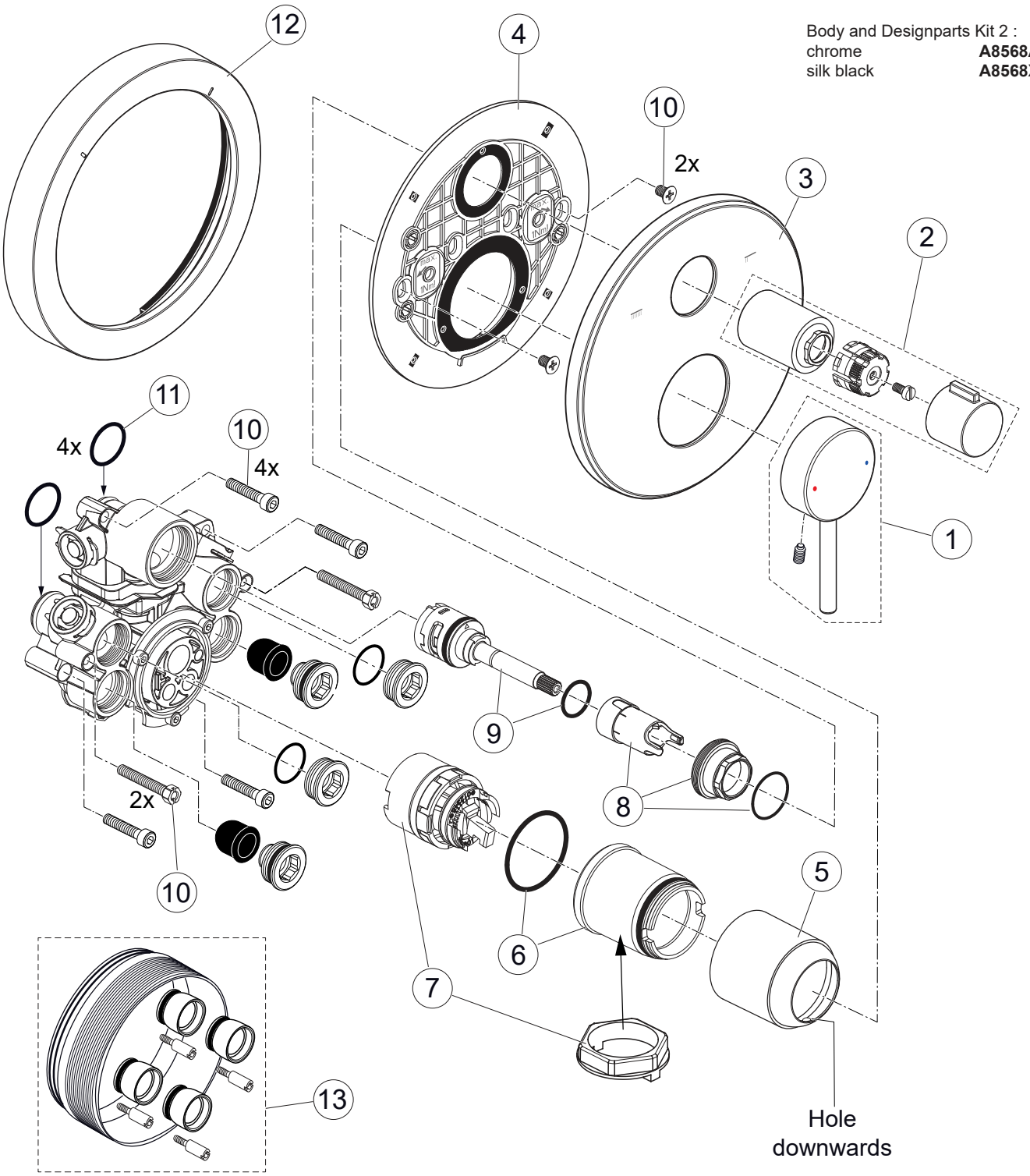

Replace XX with the appropriate finish code
Chrome = AA Silk Black = XG

Example spare part order:
A 861 873 AA in Chrome

Pos.	Description	Part-Number	Qty.
1	Lever cpl. w. Logo	**A 861 884 XX**	1 Set
2	Diverter handle cpl.	**A 861 859 XX***	1 Set
3	Escutcheon B/SH Ø157	**A 861 871 XX**	1 pcs
4	Escutcheon holder cpl.	**A 861 872 NU**	1 Set
5	Cover cap	**A 861 873 XX**	1 pcs
6	Screw ring Ø38 cartridge	**A 861 874 NU**	1 Set
7	Cardridge Ø38 with key	**A 861 500 NU***	1 Set
8	Turning-stop cpl.	**A 861 875 NU**	1 Set
9	Diverter cpl.	**A 861 861 NU**	1 Set
10	Screw set complete	**A 960 890 NU***	1 Set
11	O-ring Ø17x2,5	**A 963 143 NU**	4 pcs
12	Distanzframe 10mm	**A 7851 XX**	1 Set
	Distanzframe 20mm	**A 7877 XX**	1 Set
13	Extension kit 20mm	**A 960 704 NU**	1 Set
	Extension kit 40mm	**A 962 476 NU**	1 Set

**Universal set (not all parts needed)*

C-line Nuovo