Produced since: **Jan. 2026**

Pre-installation Kit 1 - **A1000NU**

Body and Designparts Kit 2 :
chrome **A8726AA**

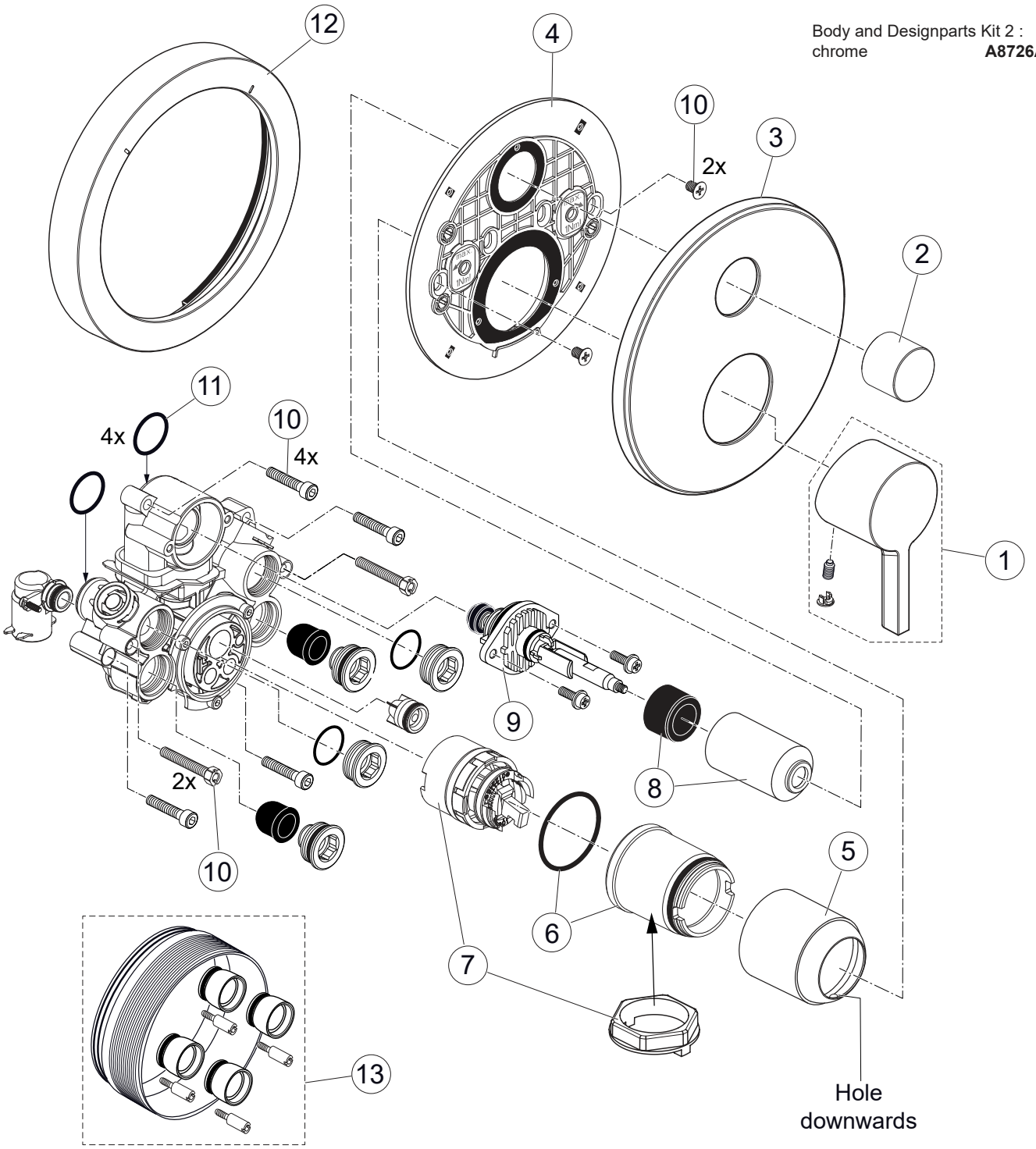

Replace XX with the appropriate finish code
Chrome = AA Silver Storm = GN Gold = A2 Magnetic Grey = A5

Example spare part order:
A 861 873 AA in Chrome

Pos.	Description	Part-Number	Qty.
1	Lever cpl. w. Logo	**B 961 665 XX**	1 Set
2	Diverter handle cpl.	**A 860 989 XX**	1 Set
3	Escutcheon B/SH Ø157	**A 861 878 XX**	1 pcs
4	Escutcheon holder cpl.	**A 861 872 NU**	1 Set
5	Cover cap	**A 861 873 XX**	1 pcs
6	Screw ring Ø38 cartridge	**A 861 874 NU**	1 Set
7	Cardridge Ø38 with key	**A 861 500 NU***	1 Set
8	Cover cap cpl.	**A 861 883 XX**	1 Set
9	Diverter	**A 963 952 NU**	1 pcs
10	Screw set complete	**A 960 890 NU***	1 Set
11	O-ring Ø17x2,5	**A 963 143 NU**	4 pcs
12	Distanzframe 10mm	**A 7851 XX****	1 Set
	Distanzframe 20mm	**A 7877 XX**	1 Set
13	Extension kit 20mm	**A 960 704 NU**	1 Set
	Extension kit 40mm	**A 962 476 NU**	1 Set

**Universal set (not all parts needed)*
***Only in AA and XG available*