GEBERIT AQUACLEAN MERA

GEBERIT

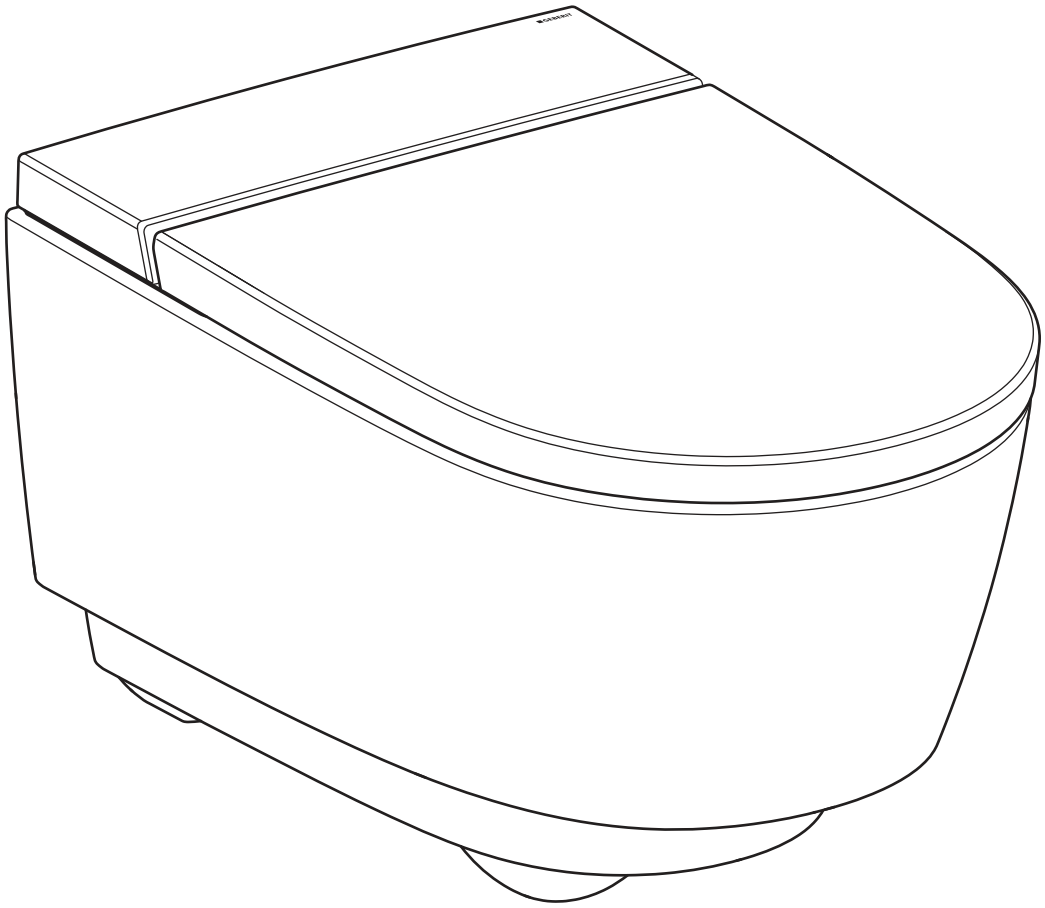

INSTALLATION MANUAL

MONTAGEANLEITUNG
INSTRUCTIONS DE MONTAGE
ISTRUZIONI PER IL MONTAGGIO

KNOW HOW INSTALLED

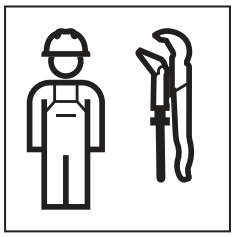

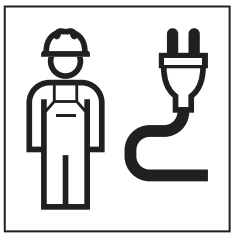

973.004.00.0(00)

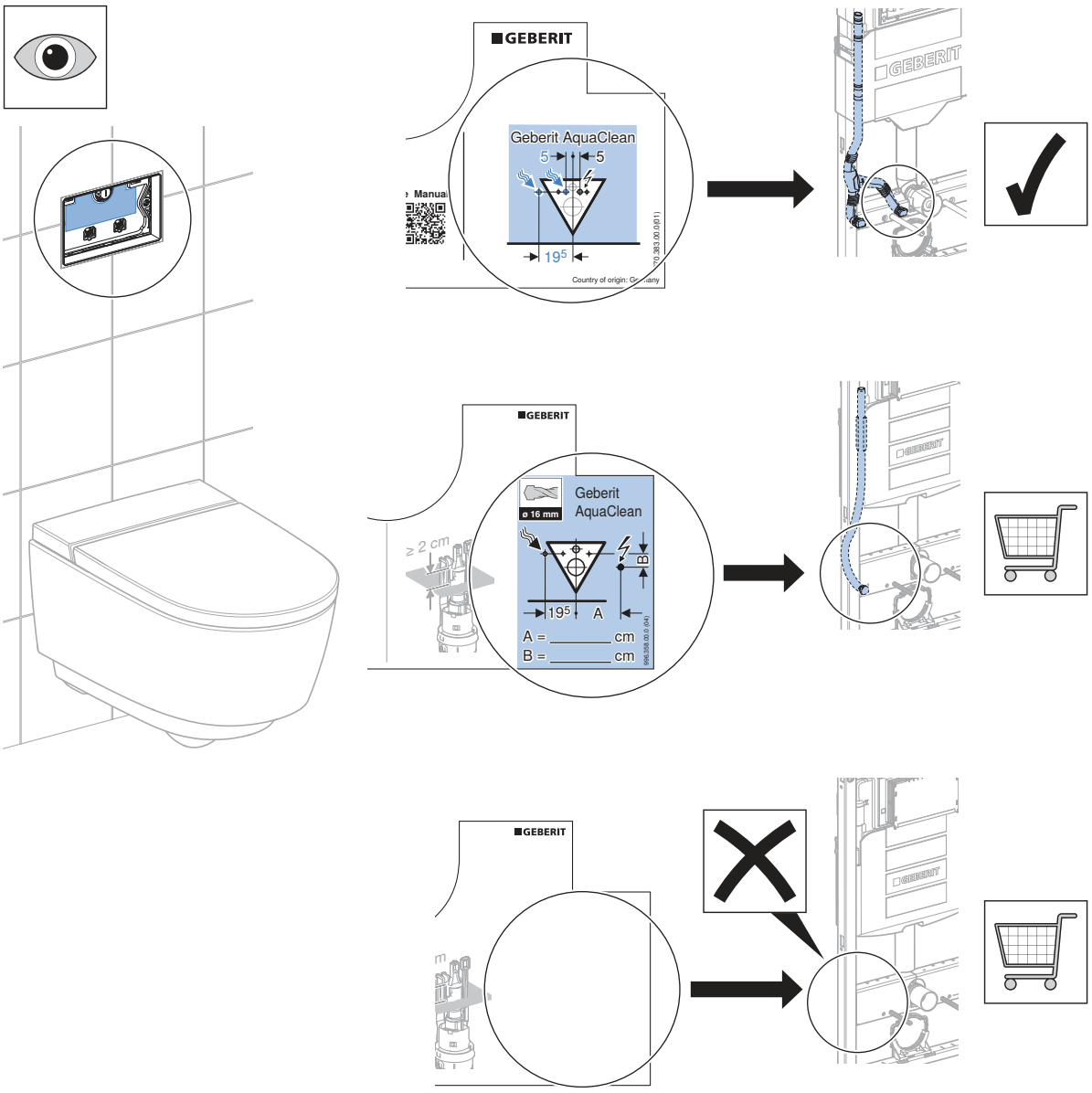

9007214266576139 © 07-2026
973.004.00.0(00)

cm

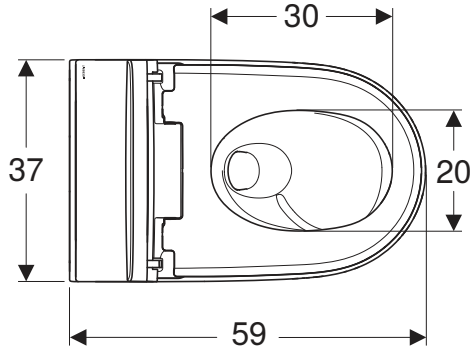

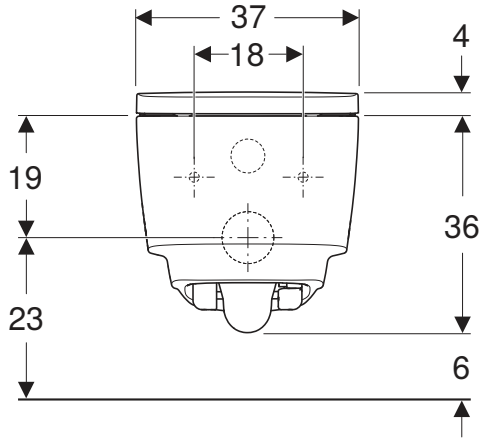

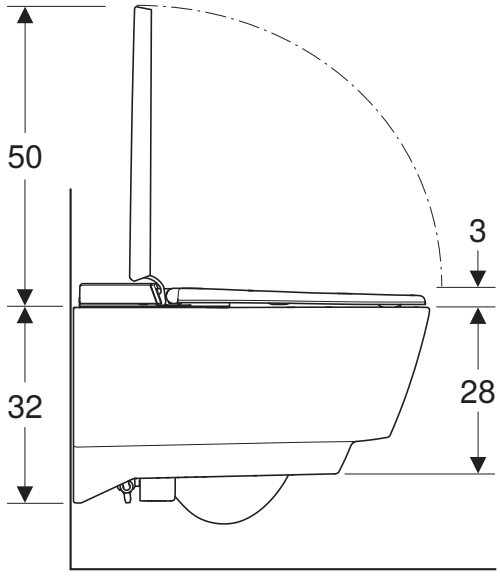

1

1

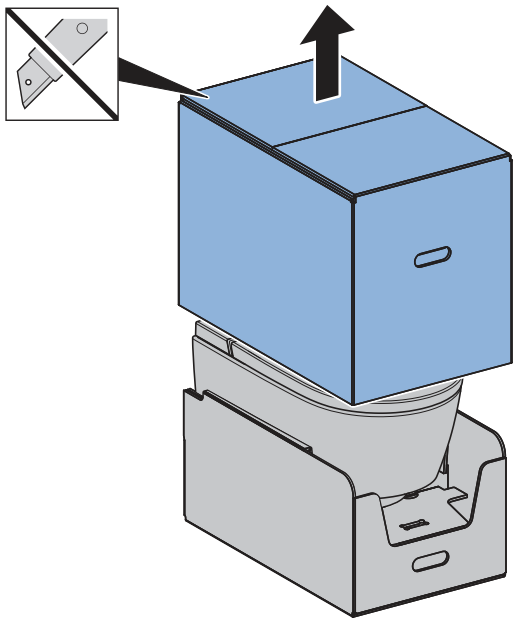

2

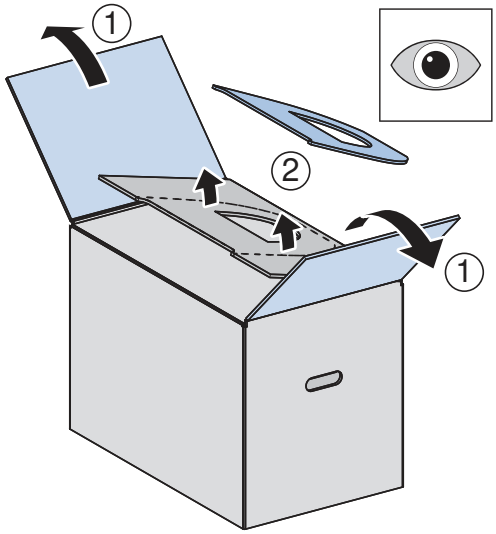

3

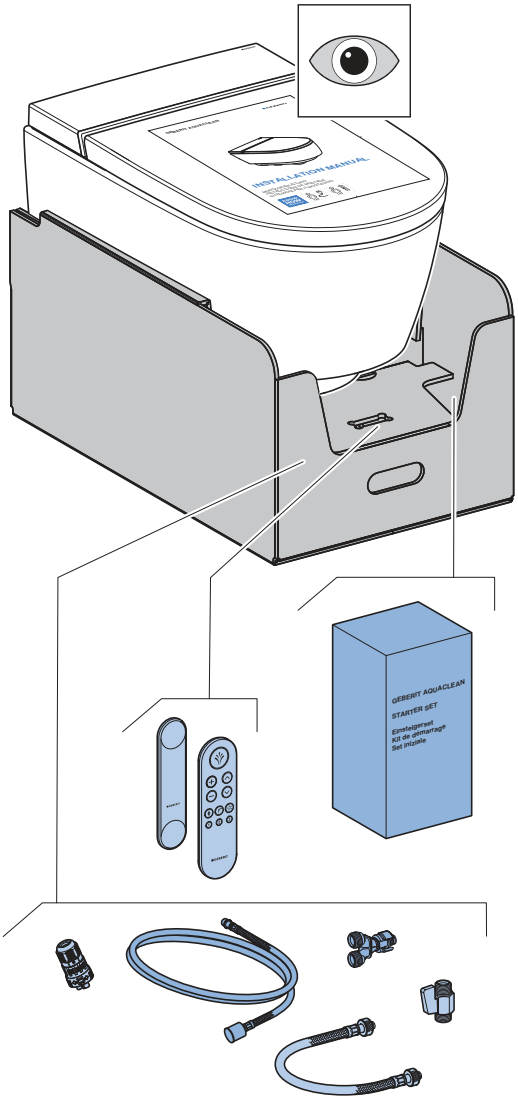

4

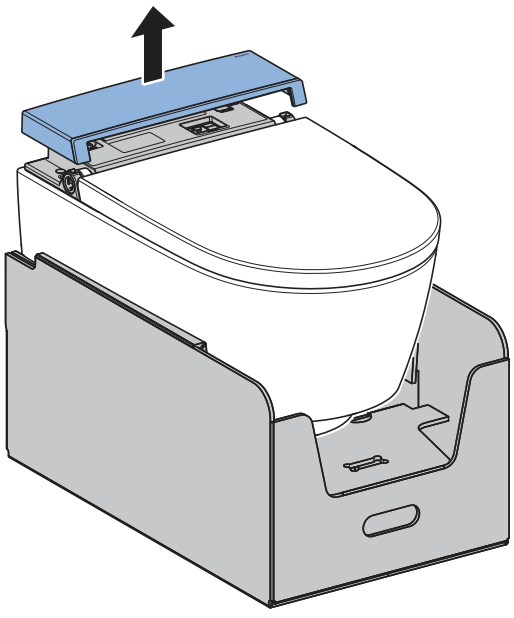

9007214266576139 © 07-2026
973.004.00.0(00)

5

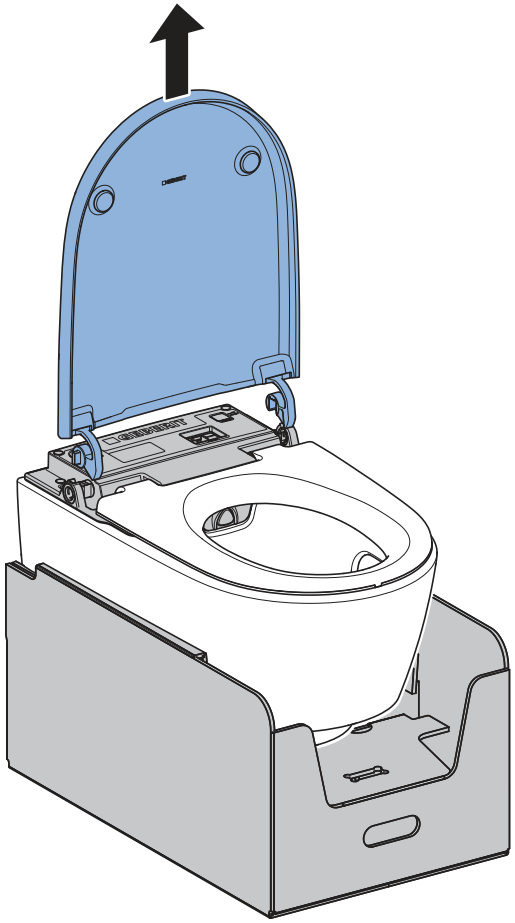

6

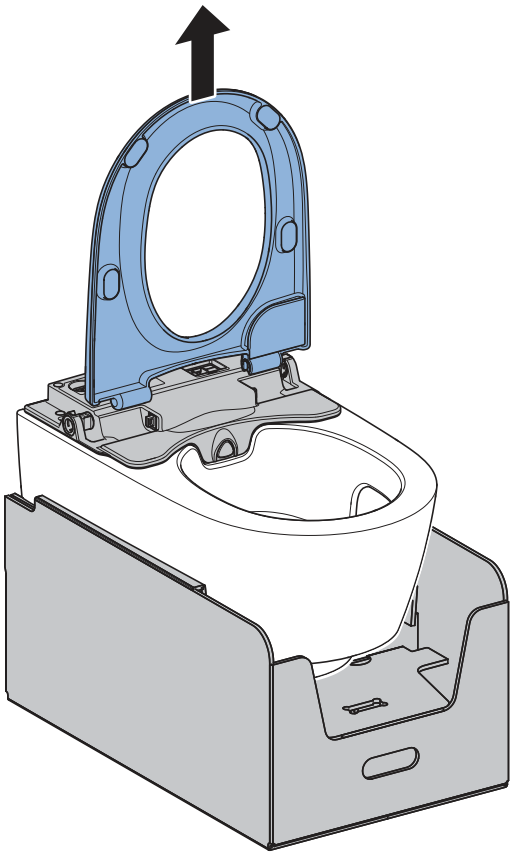

7

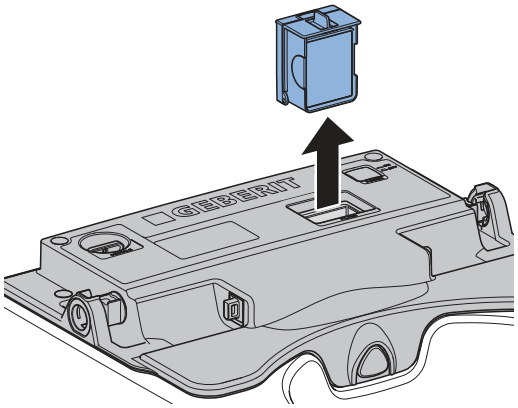

8

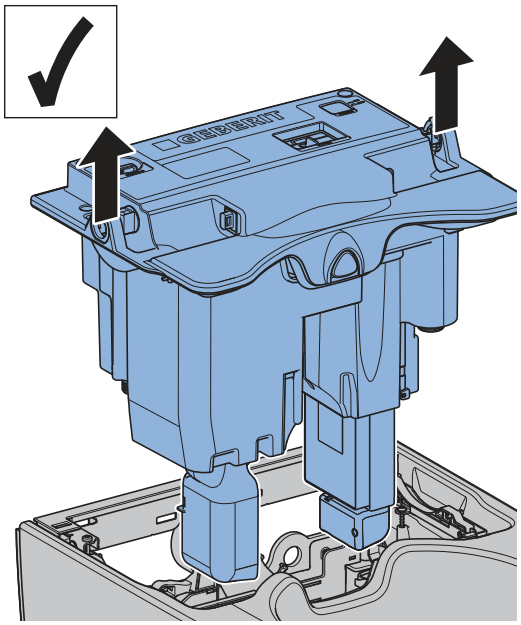

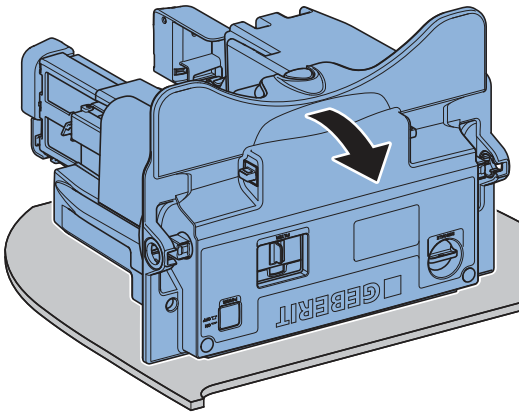

2



✓

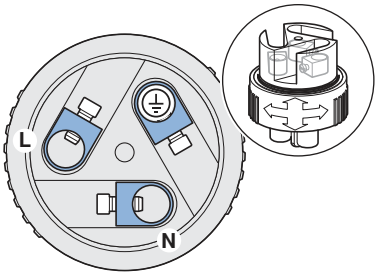

1

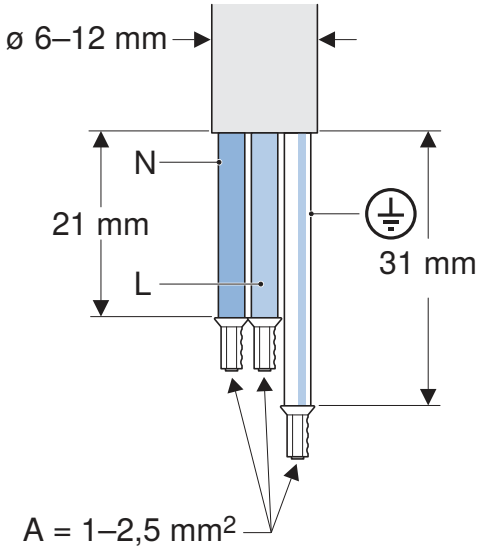

2

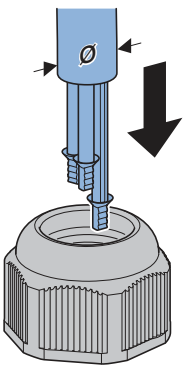

3

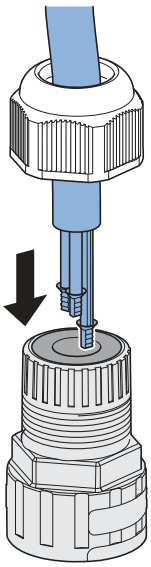

4

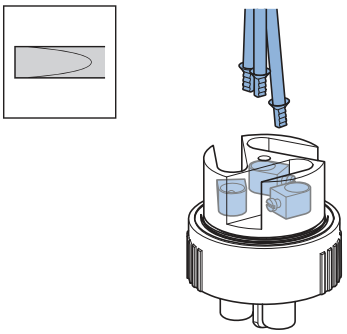

5

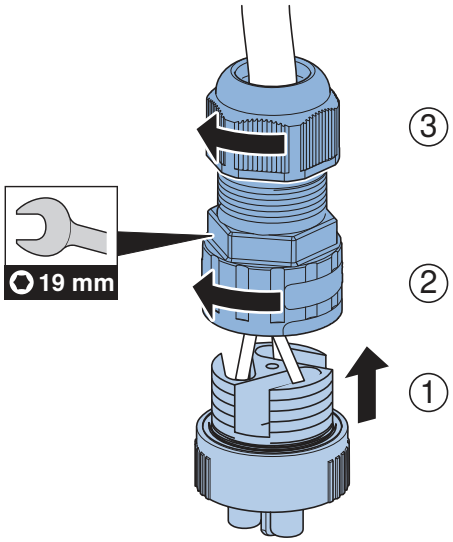

9007214266576139 © 07-2026
973.004.00.0(00)

3

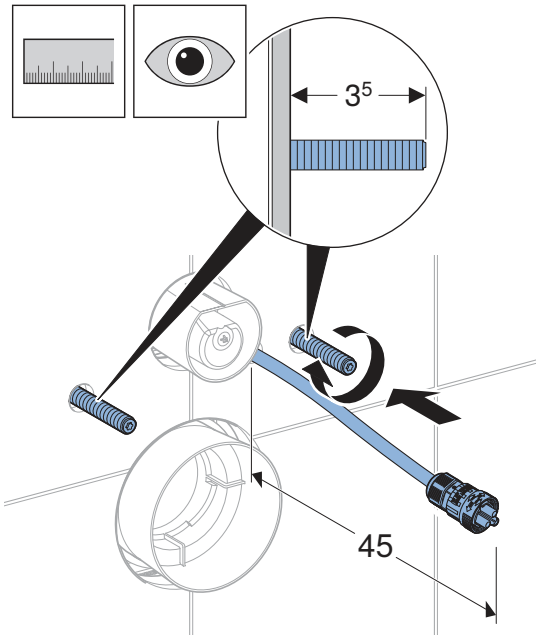
3⁵
45

4

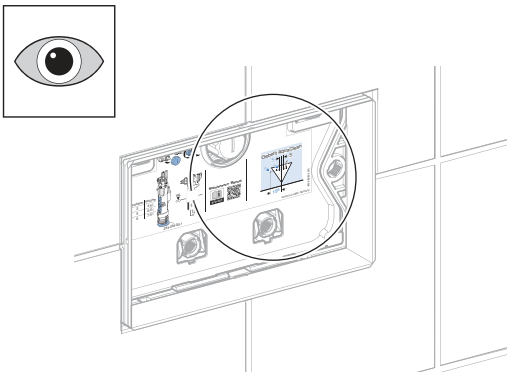

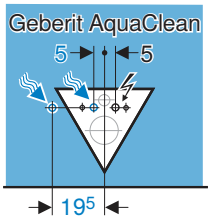
Geberit AquaClean
5
5
19⁵

4 A 8

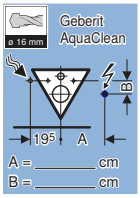
ø 16 mm
Geberit
AquaClean
B
19⁵
A
A = _____ cm
B = _____ cm

4 B 10

4 A

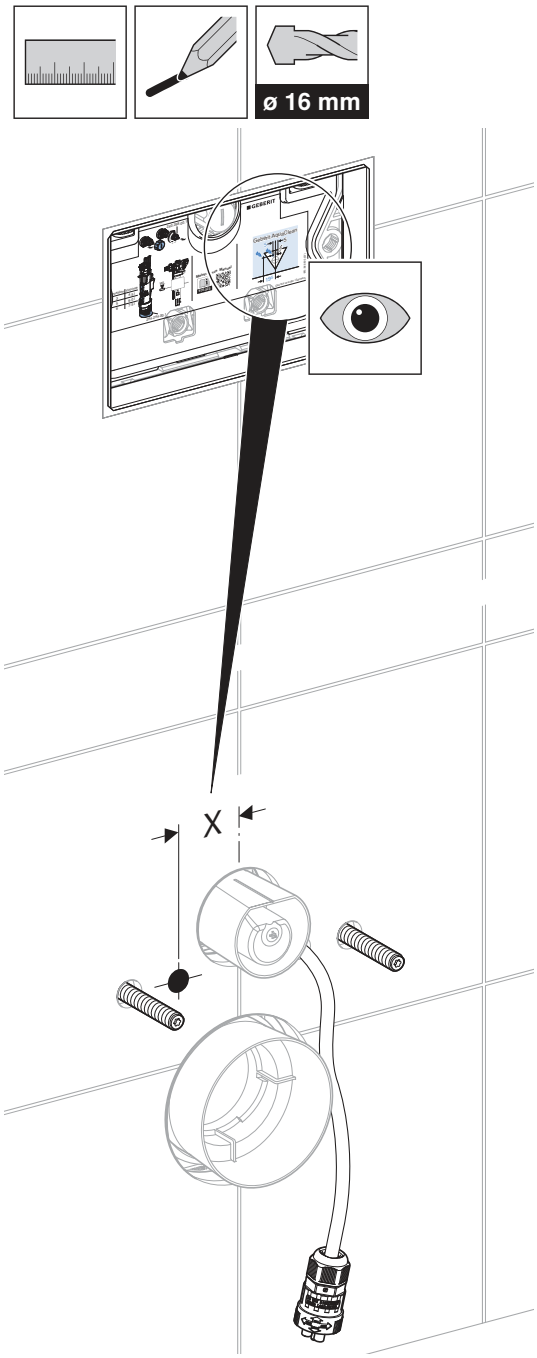

1

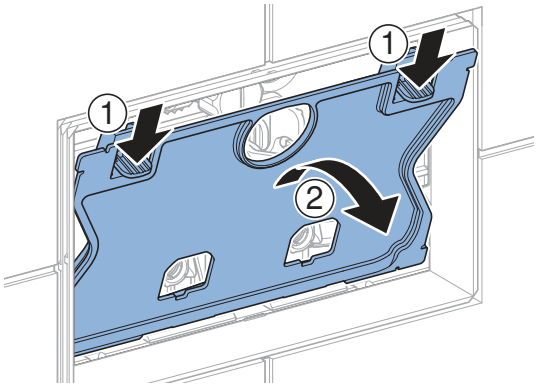

2

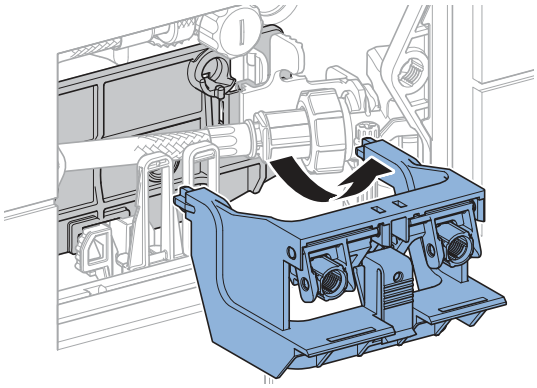

9007214266576139 © 07-2026
973.004.00.0(00)

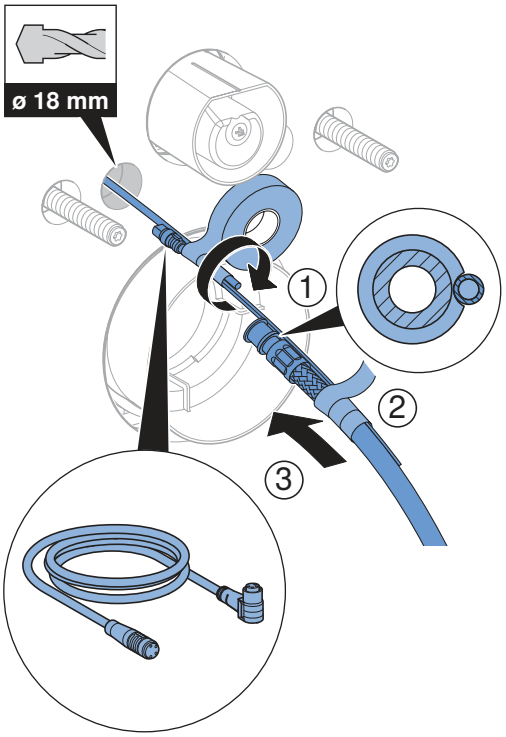

3

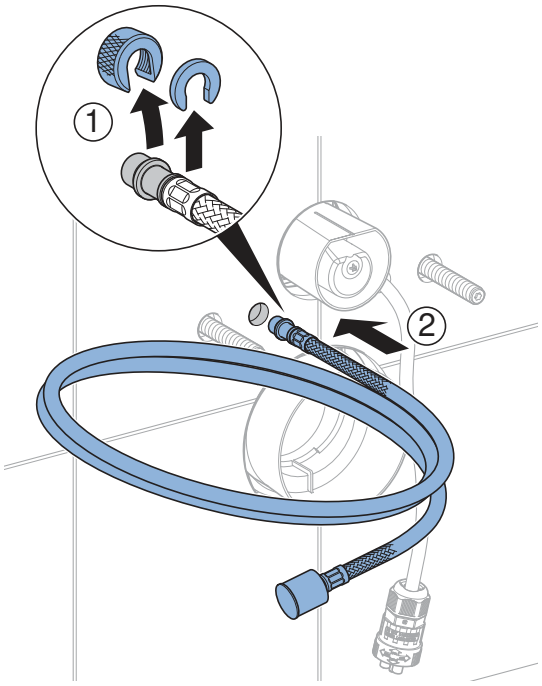

4

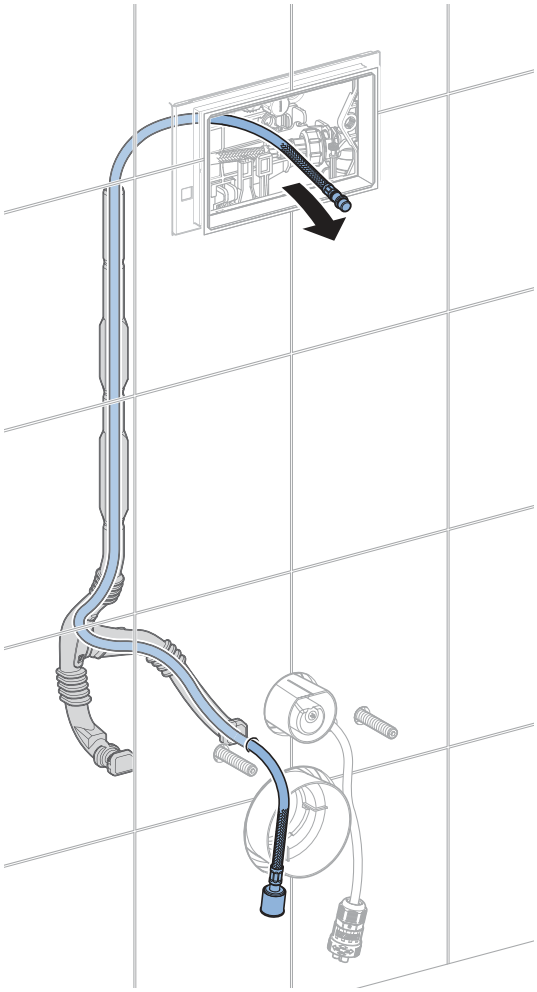

✓

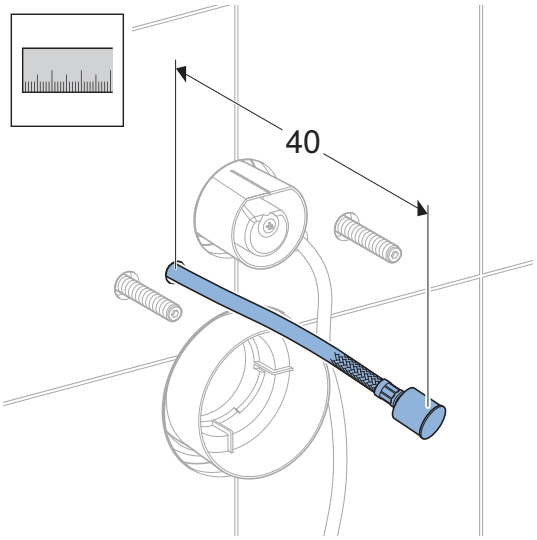

4 B

1

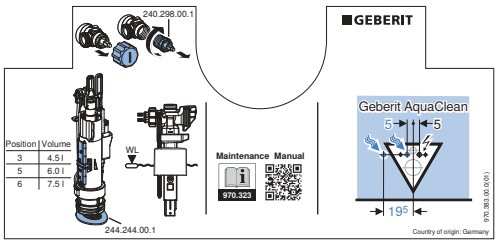

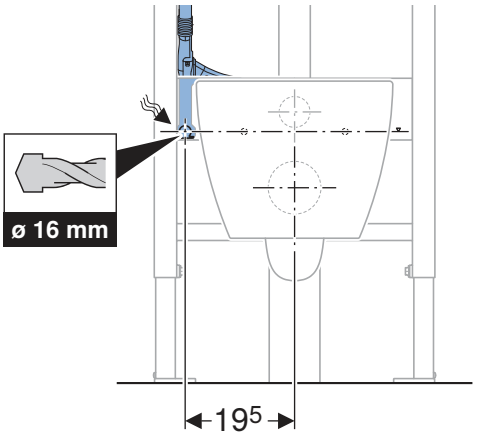

2

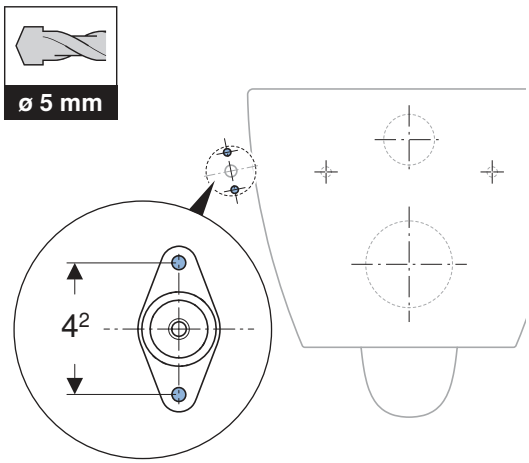

3

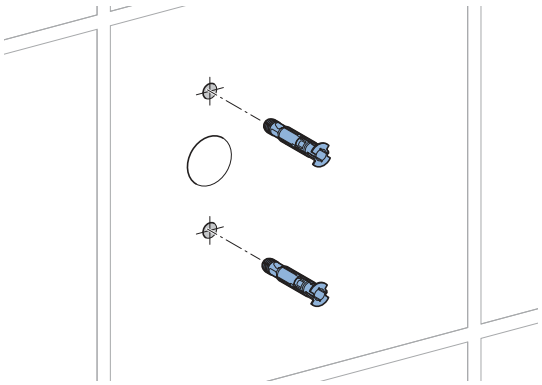

4

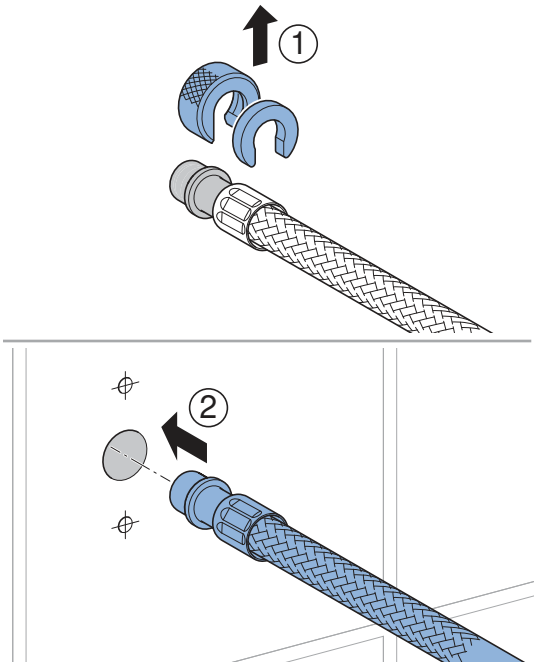

5

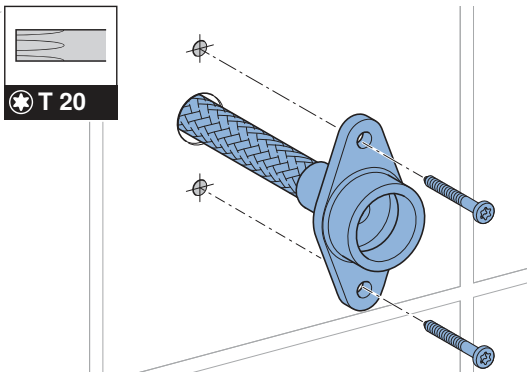

9007214266576139 © 07-2026
973.004.00.0(00)

6

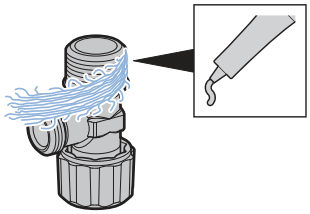

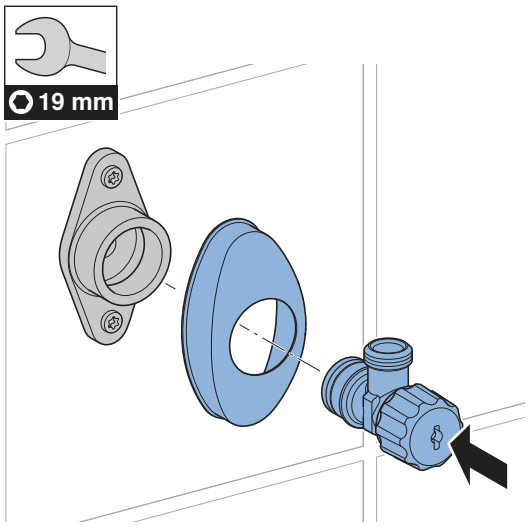

7

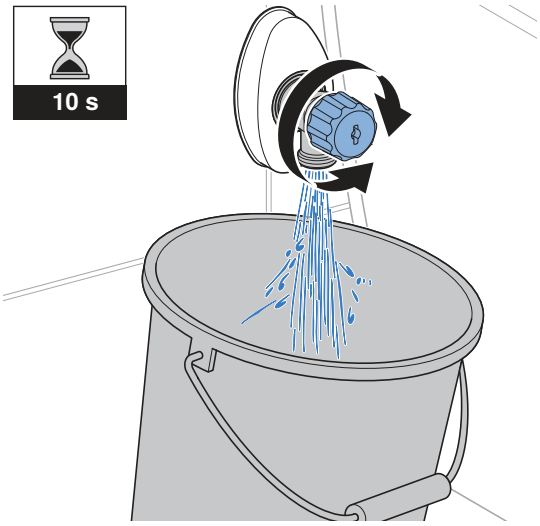

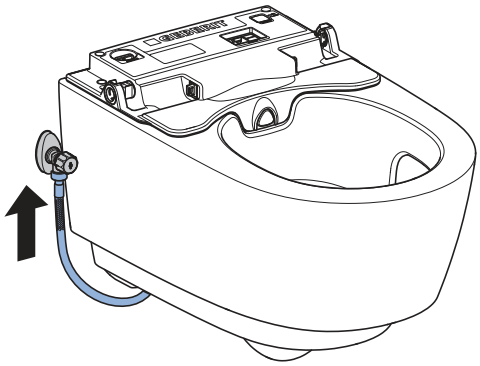

5

Sigma

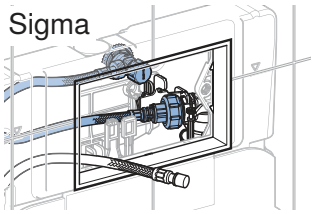

5 A 12

Omega

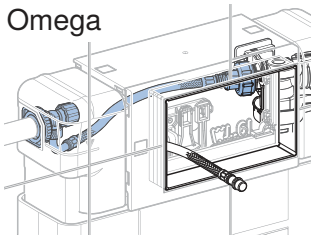

5 B 13

Omega PEX

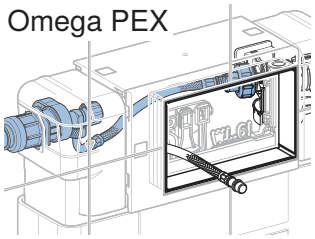

5 C 14

Geberit Monolith

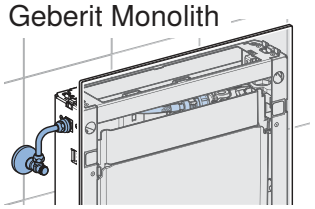

5 D 15

5 A

✓ Sigma

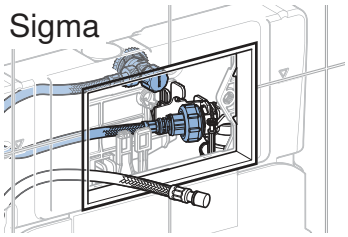

1

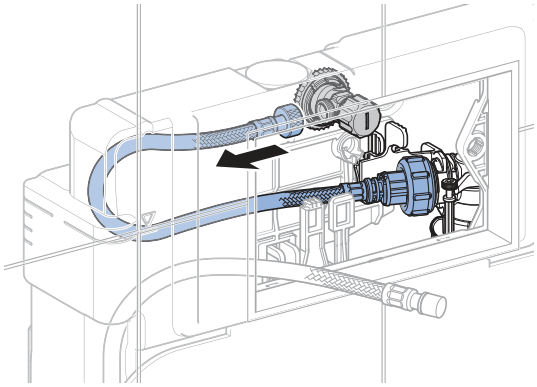

2

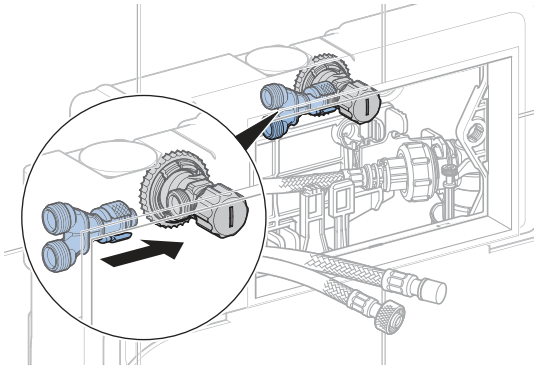

3

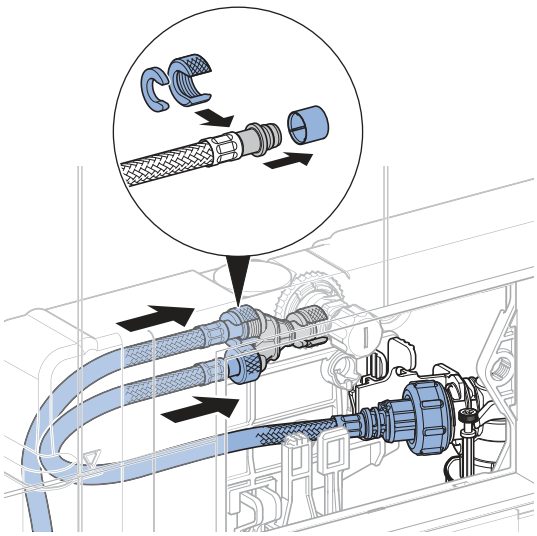

9007214266576139 © 07-2026
973.004.00.0(00)

5 B

✓

Omega

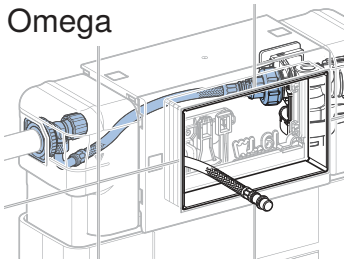

1

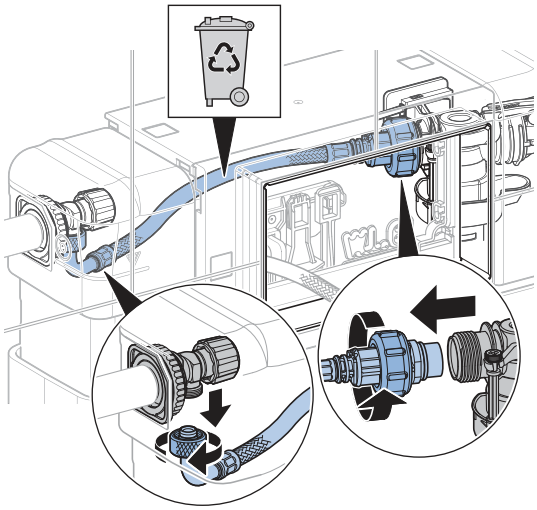

2

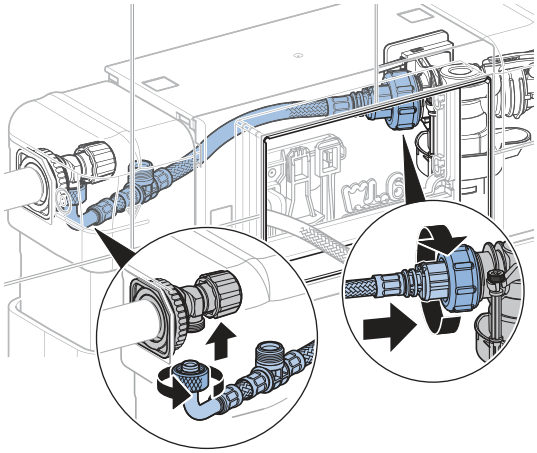

3

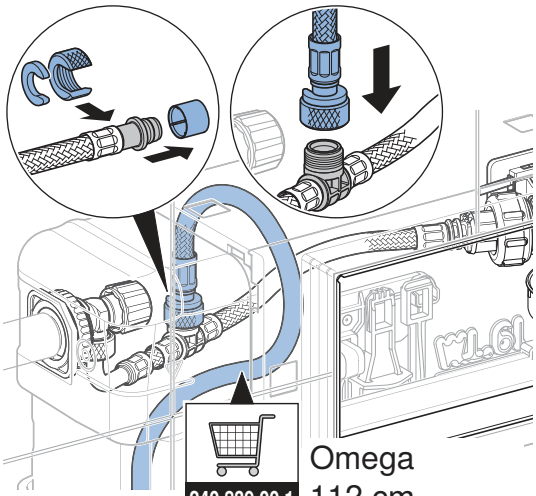

240.839.00.1 Omega 112 cm

147.020.00.1 Omega/Kappa 82 cm/98 cm

5 C

✓

Omega PEX

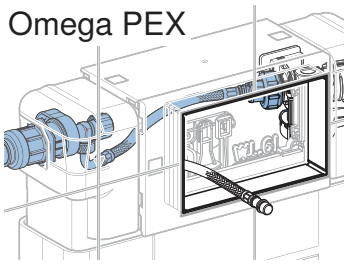

1

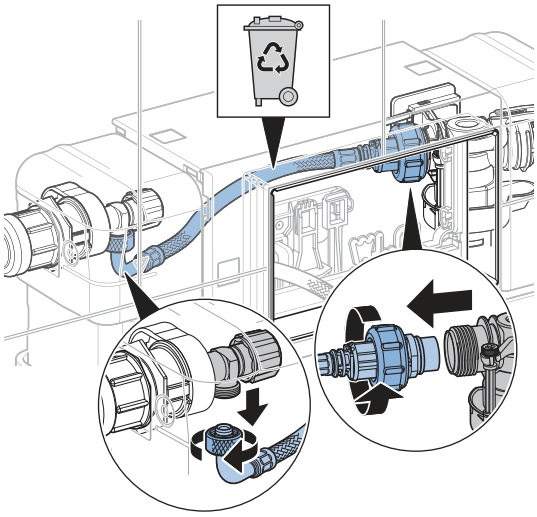

2

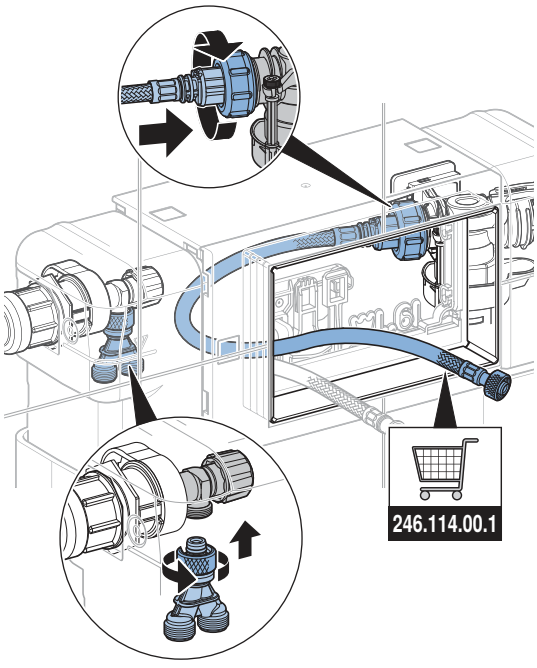

3

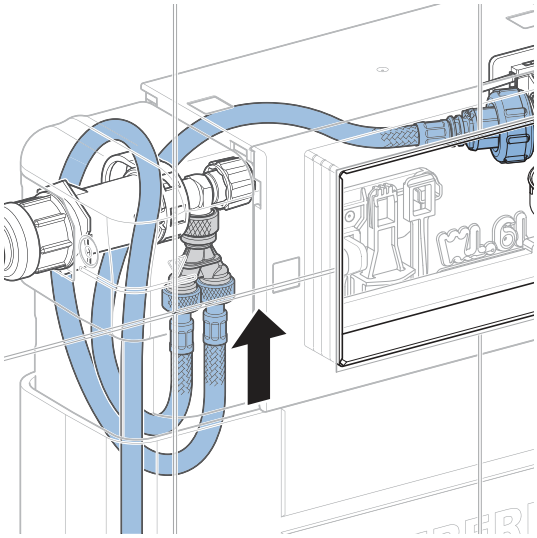

9007214266576139 © 07-2026
973.004.00.0(00)

5 D

✓

Geberit Monolith

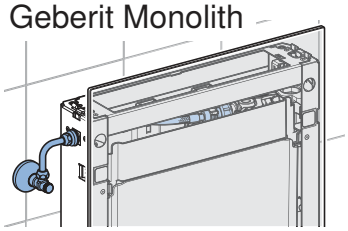

1

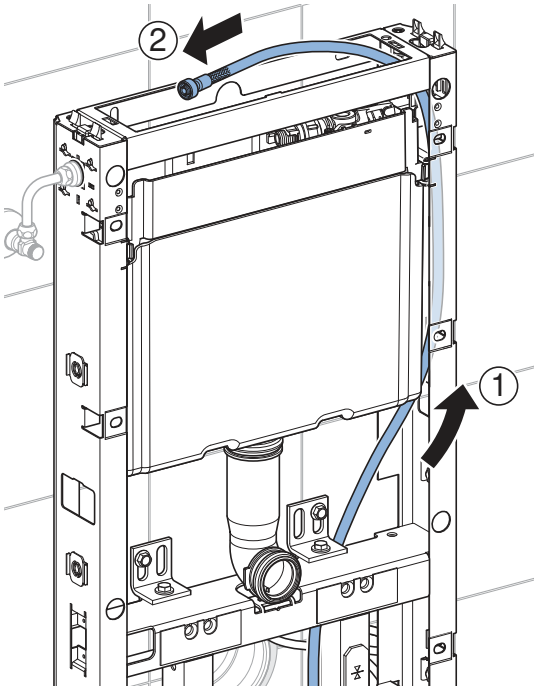

2

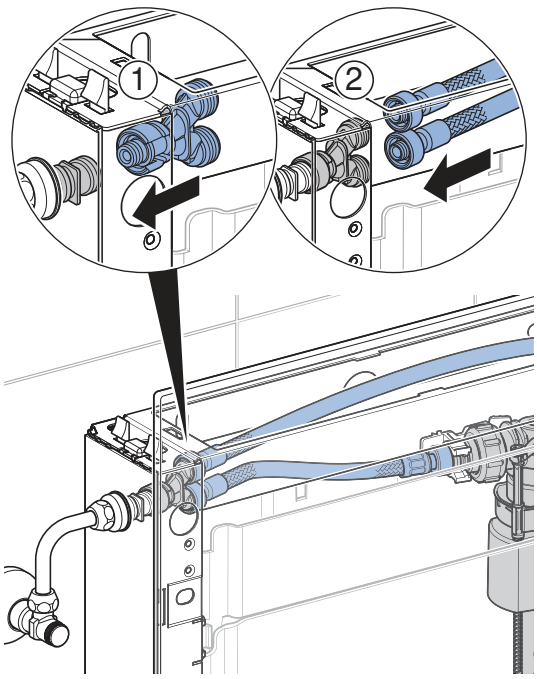

3

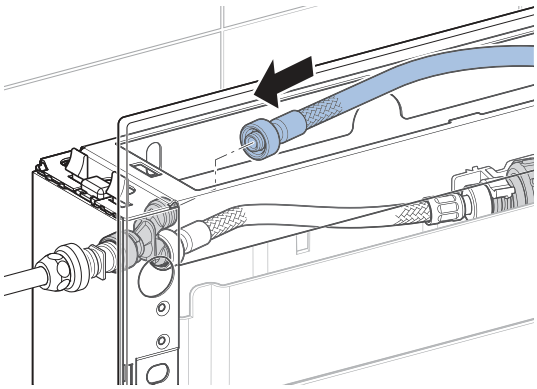

4

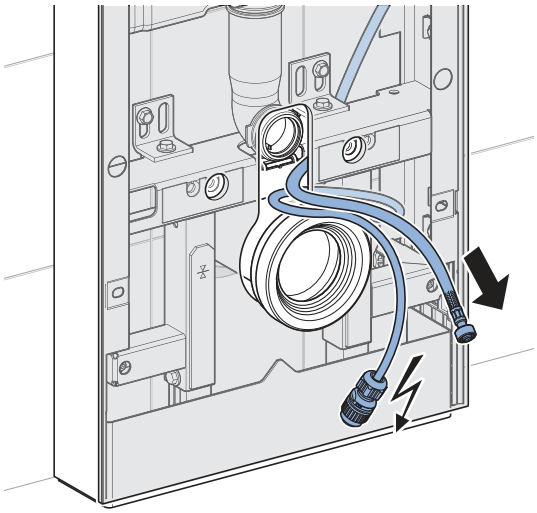

5

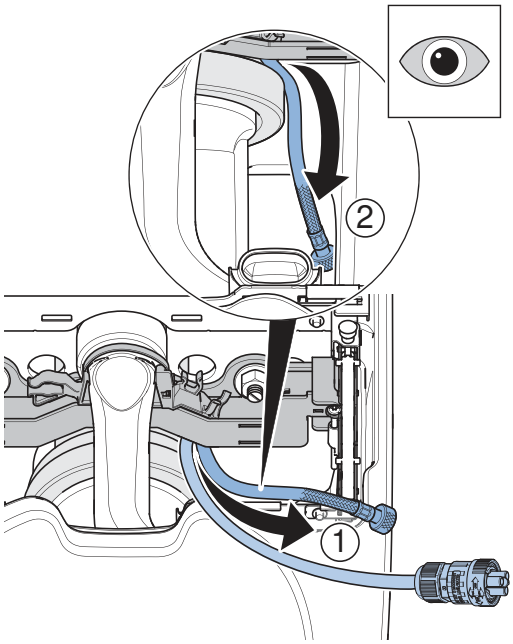

6

1

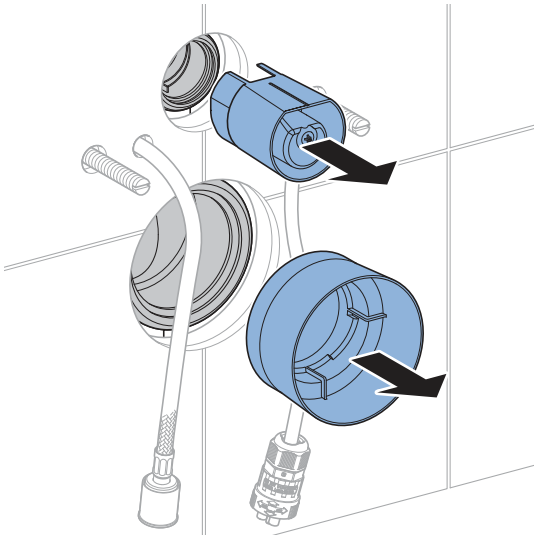

2

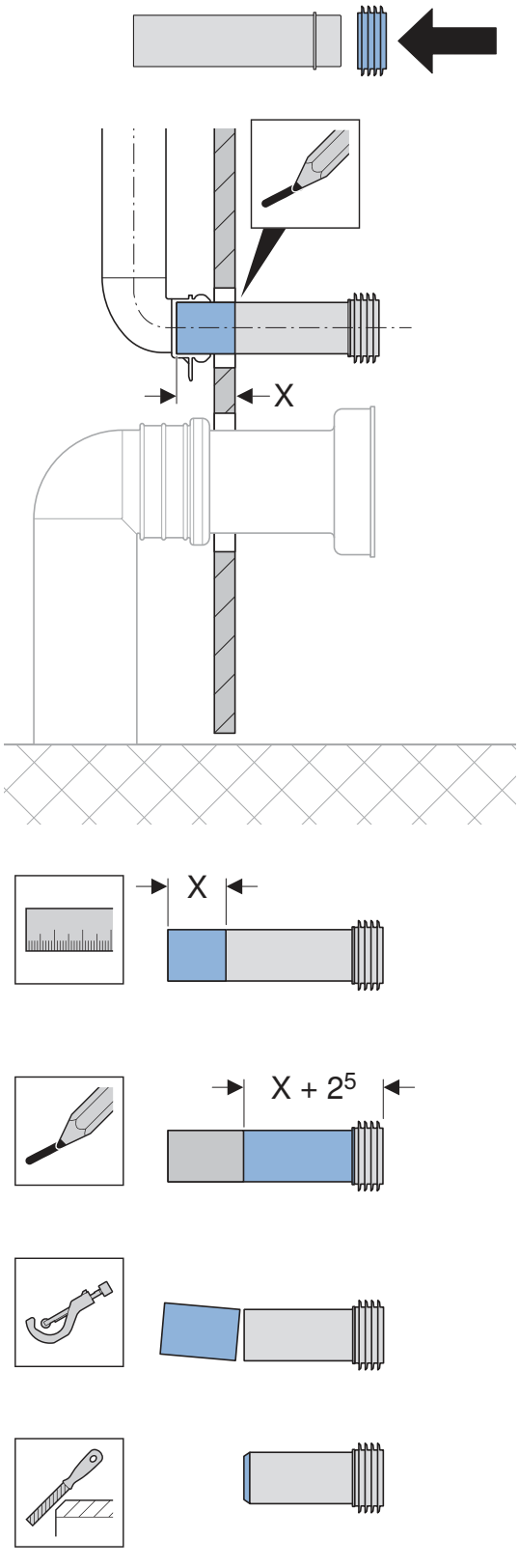

9007214266576139 © 07-2026

3

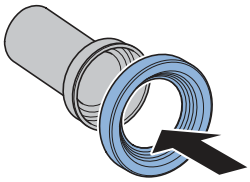

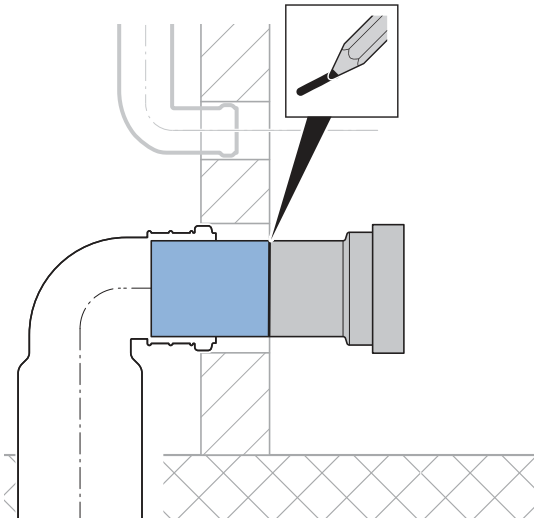

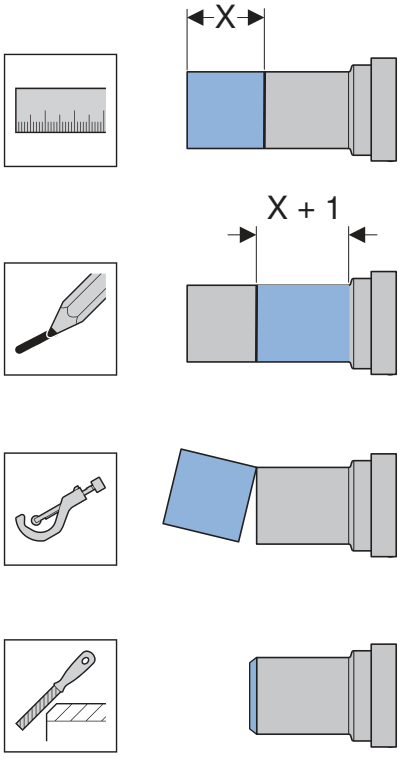

4

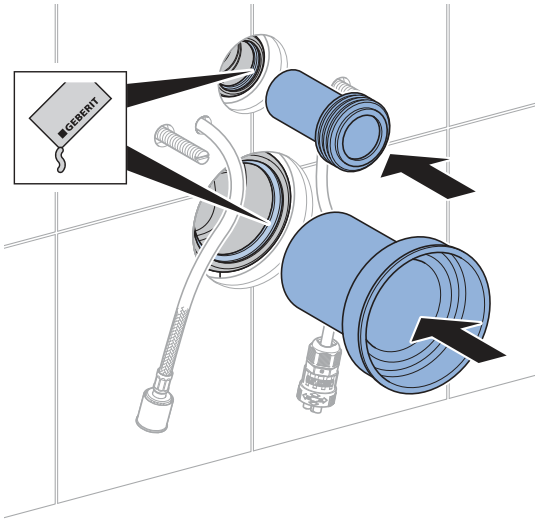

5

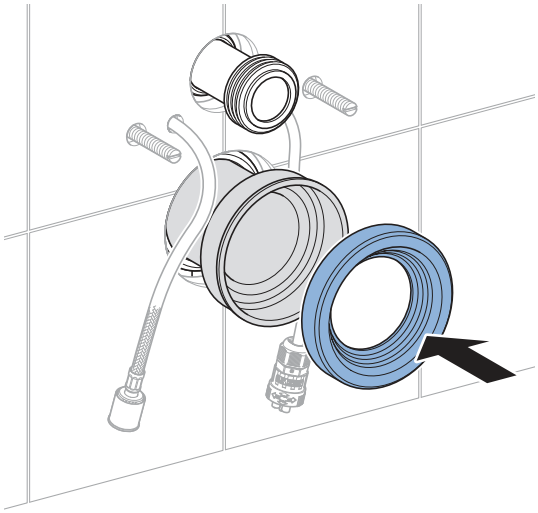

6

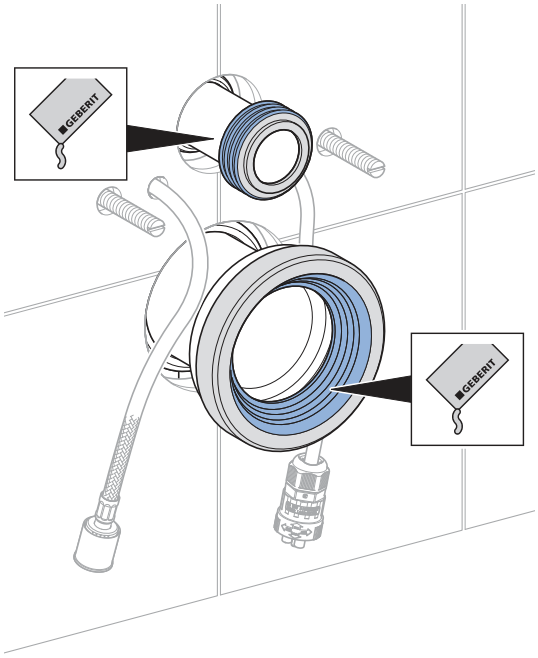

7

1

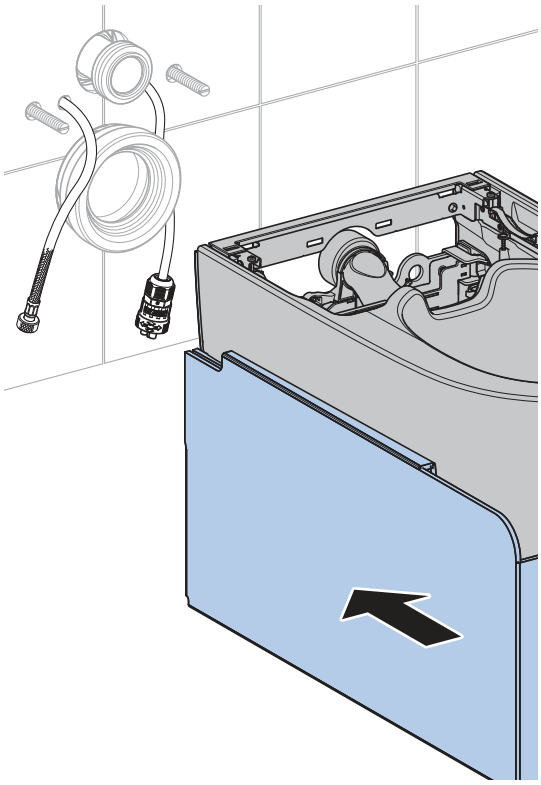

2

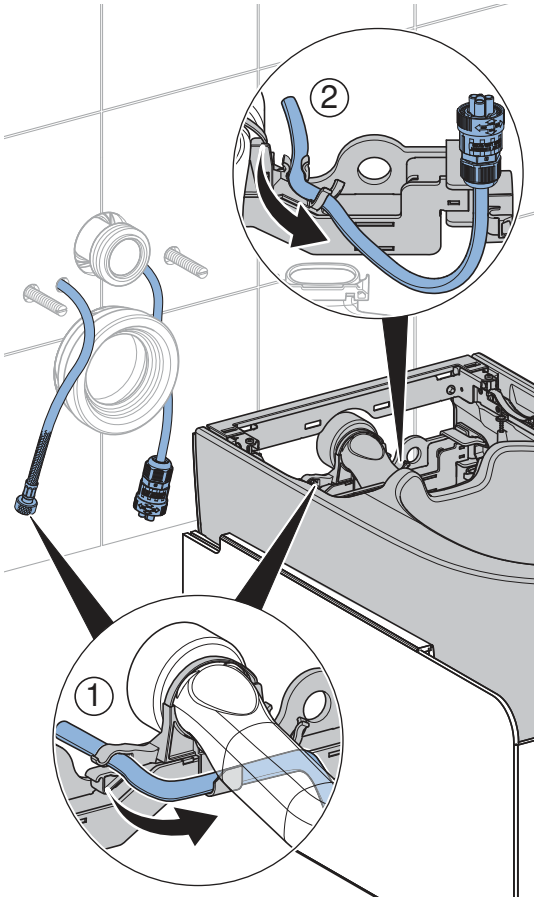

3

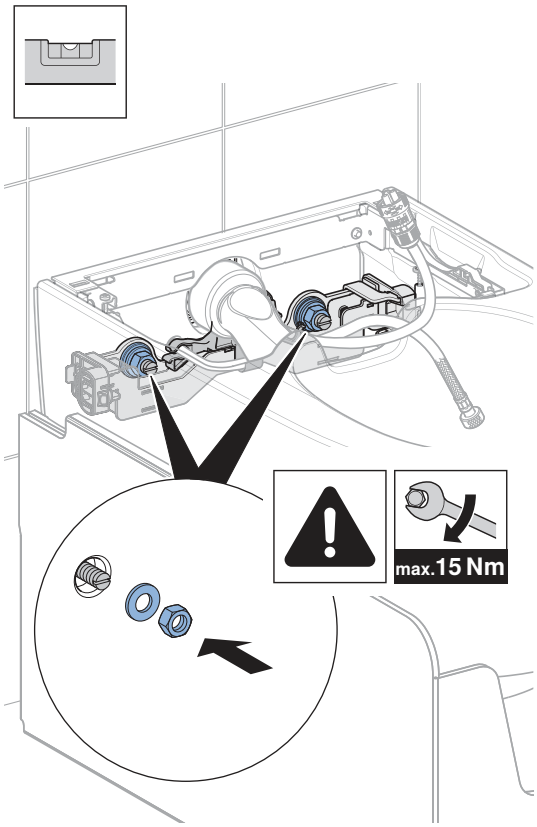

4

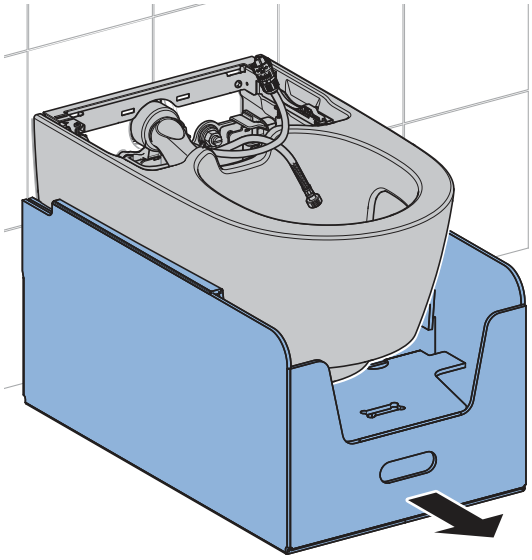

9007214266576139 © 07-2026
973.004.00.0(00)

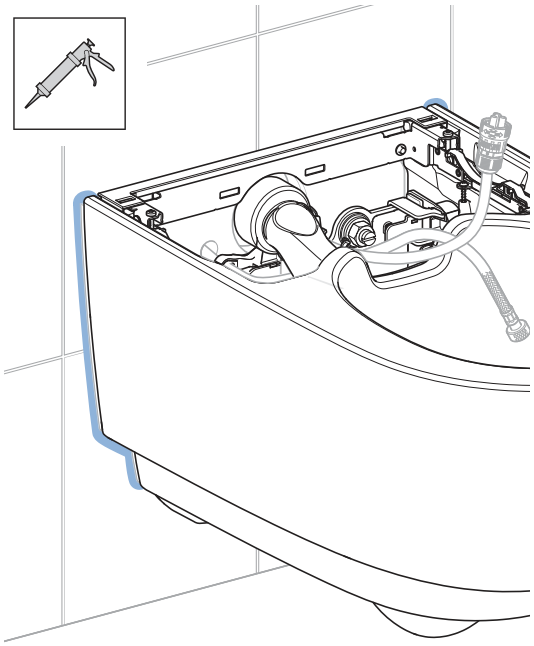

5

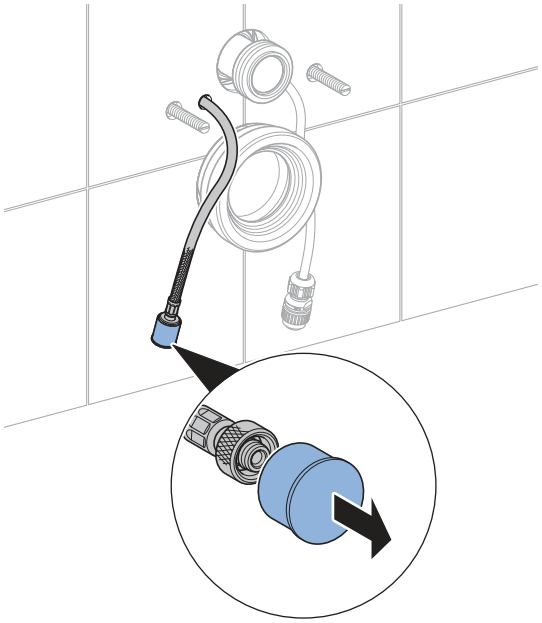

6

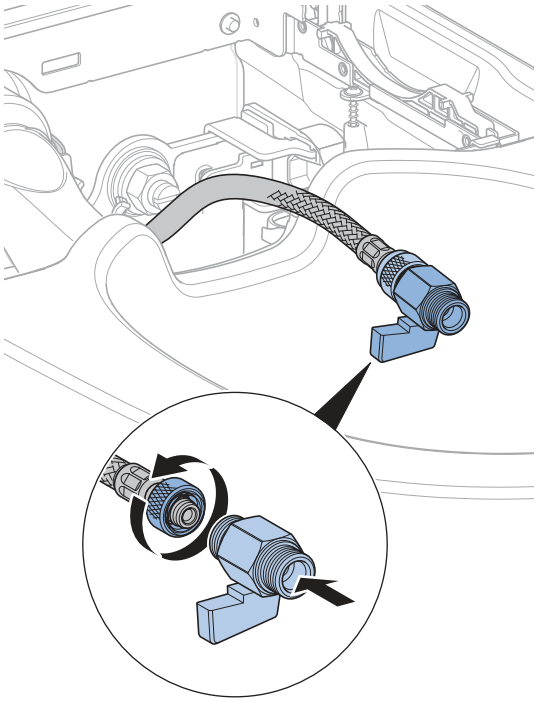

7

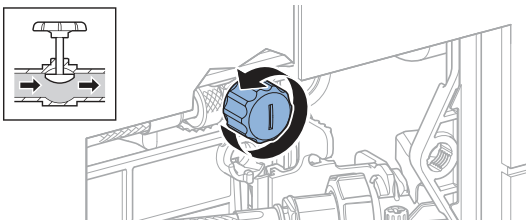

8

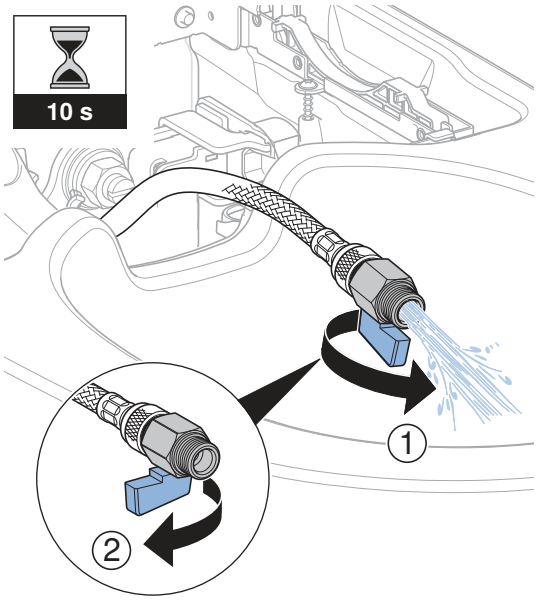

9

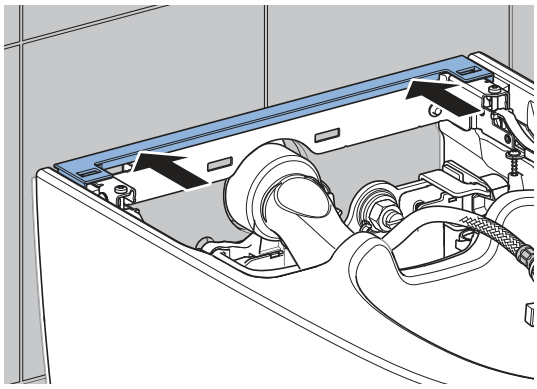

10

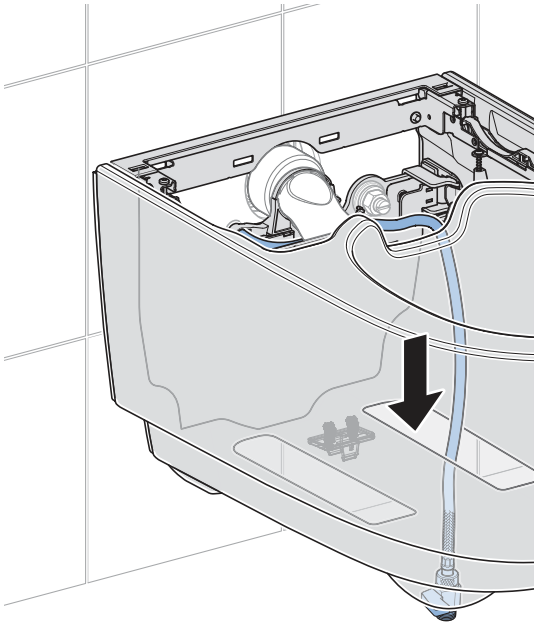

8

✓

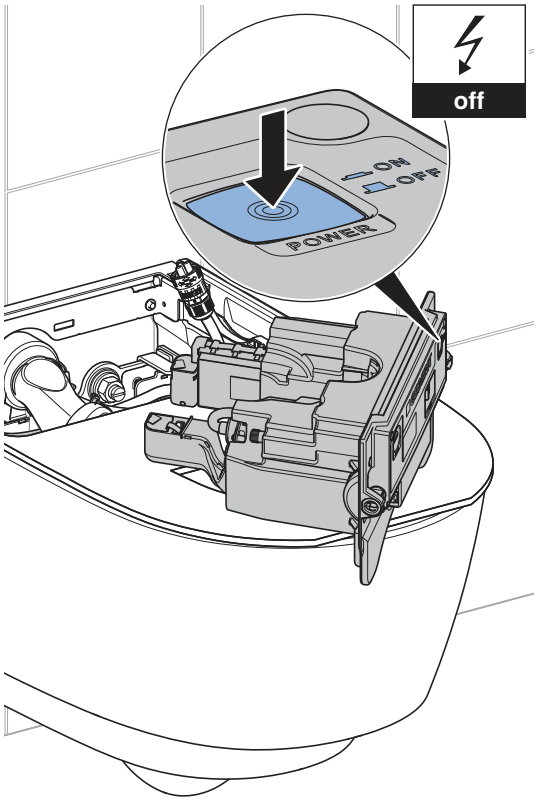

1

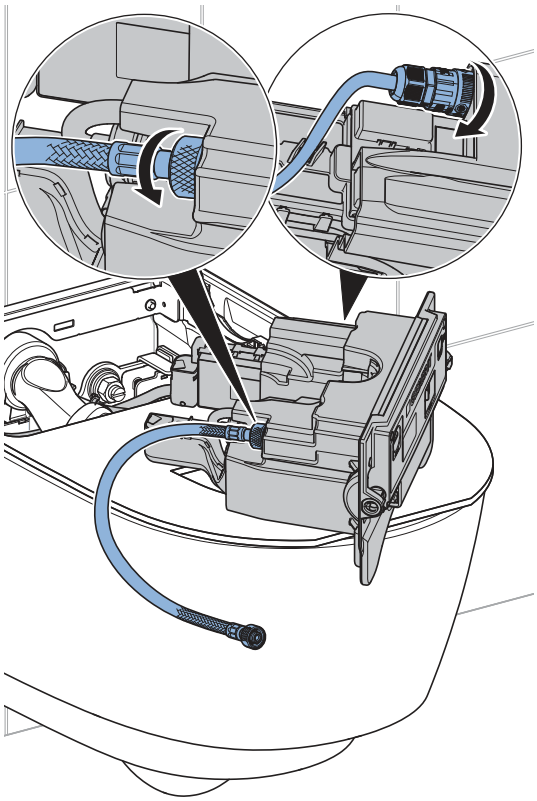

9007214266576139 © 07-2026
973.004.00.0(00)

2

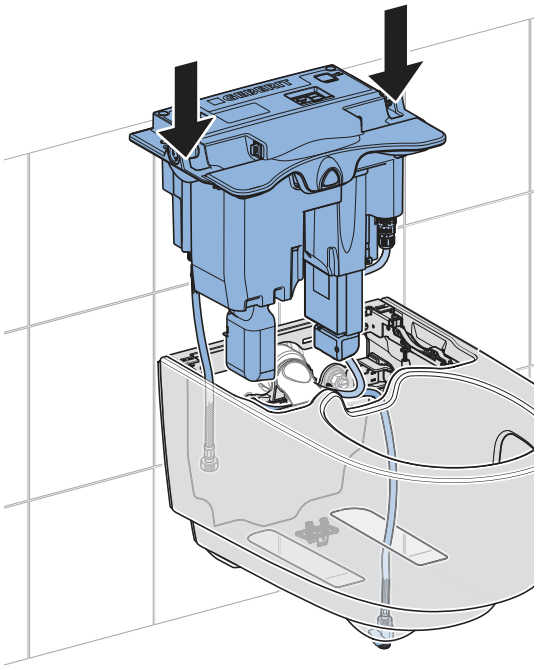

3

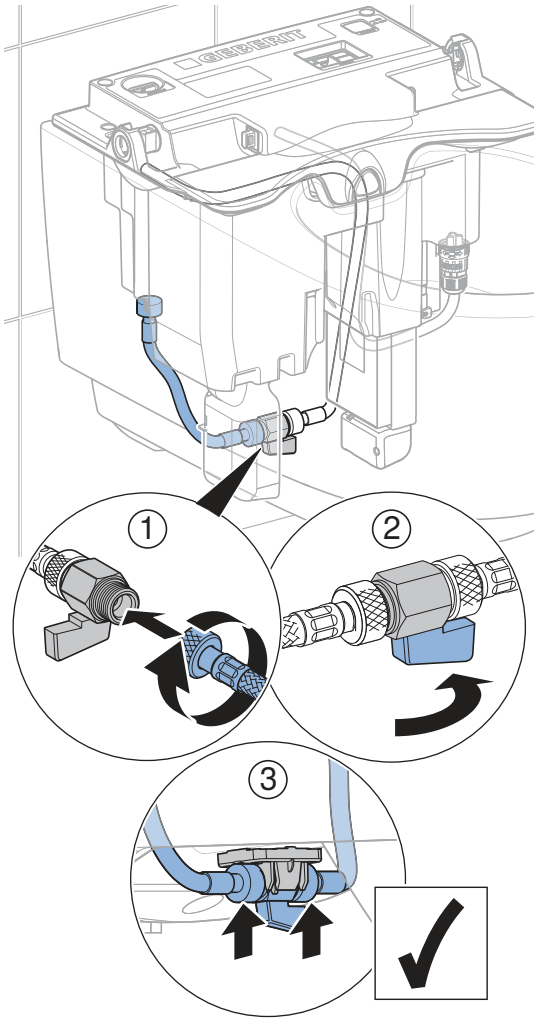

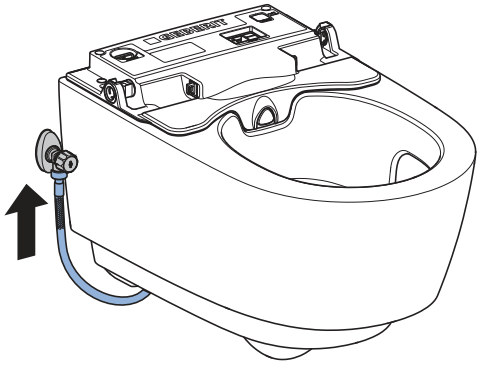

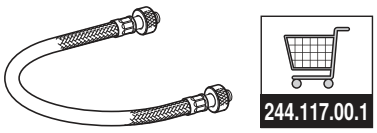

4

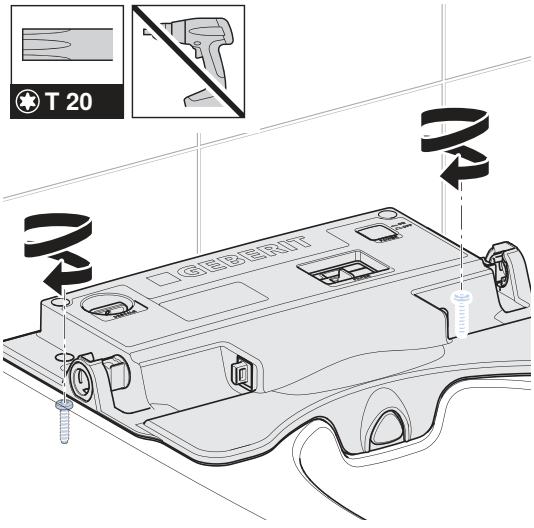

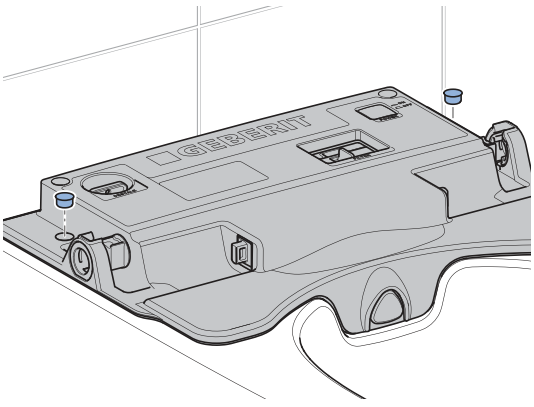

9

✓

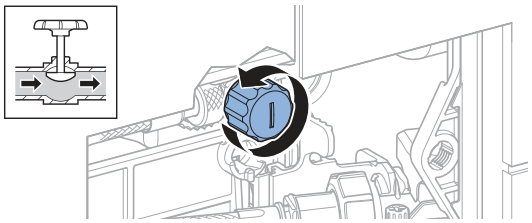

1

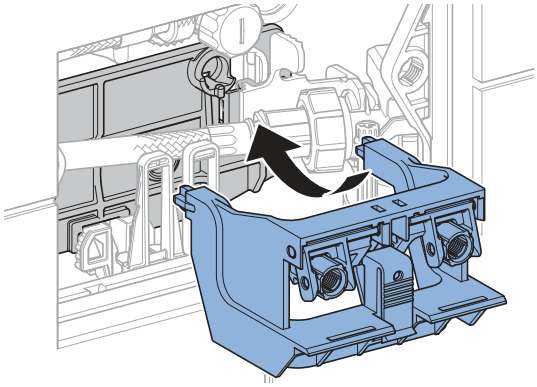

2

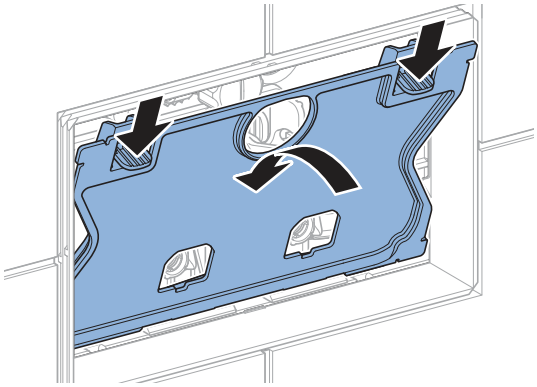

3

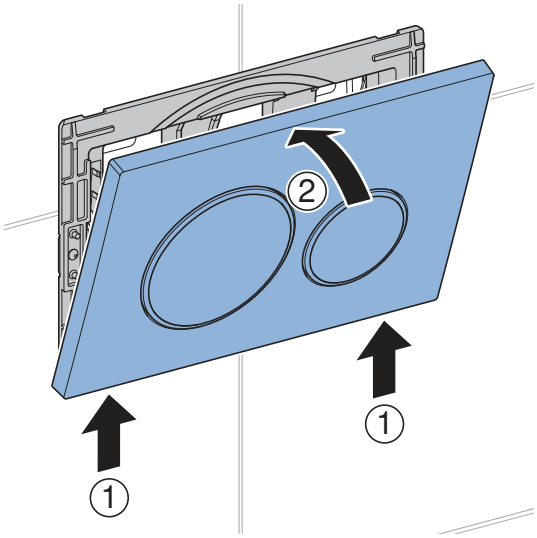

4

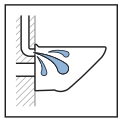

6 l

3 l

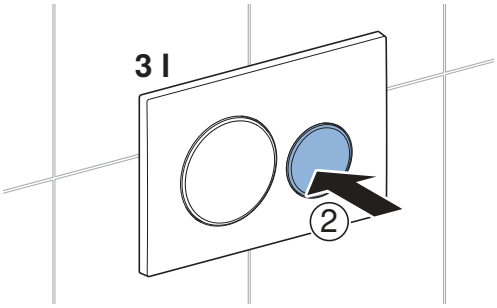

9007214266576139 © 07-2026
973.004.00.0(00)

10

✓

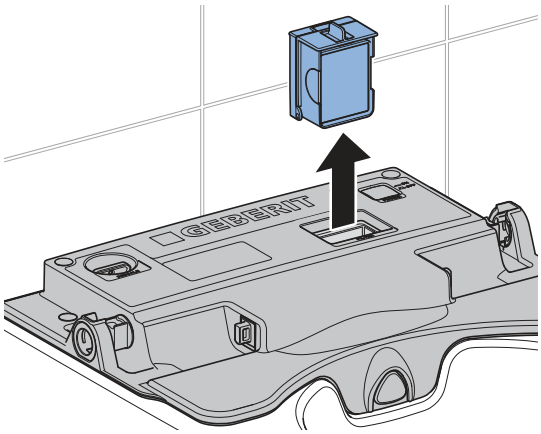

1

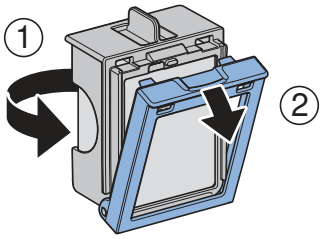

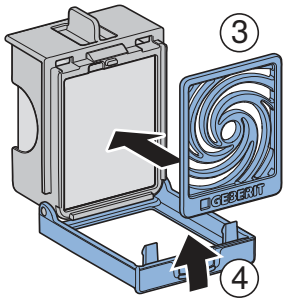

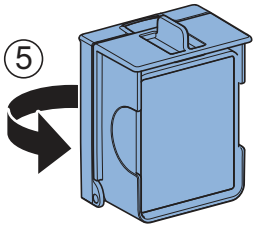

2

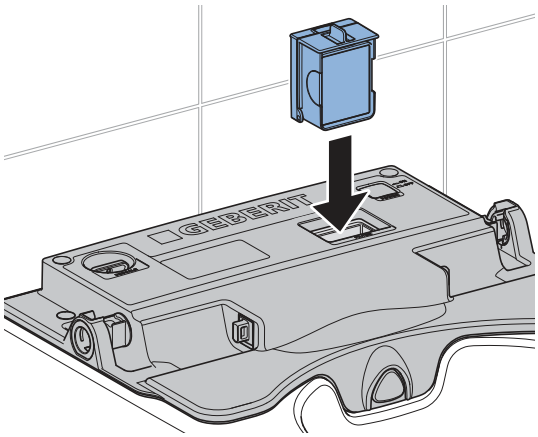

11

1

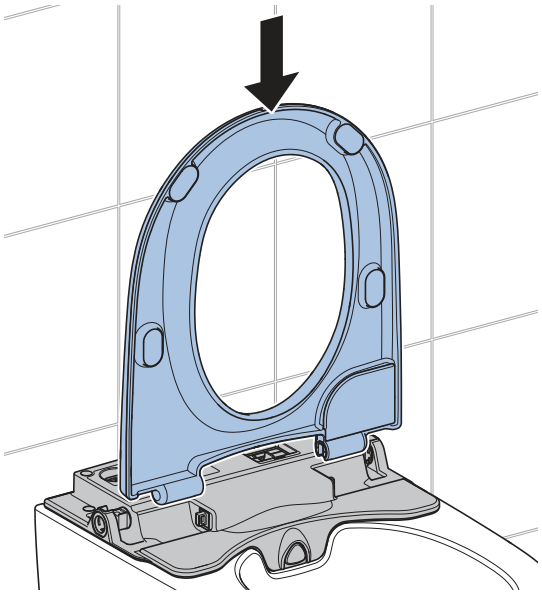

2

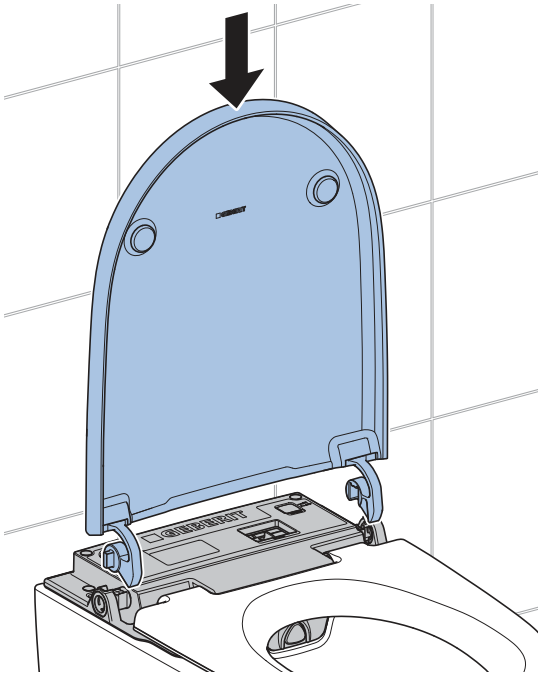

3

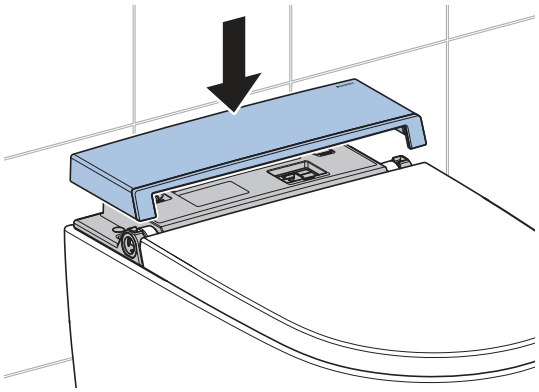

9007214266576139 © 07-2026
973.004.00.0(00)

1

✓

✓

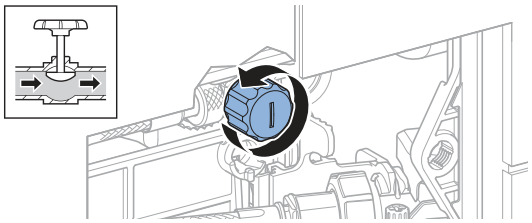

▶

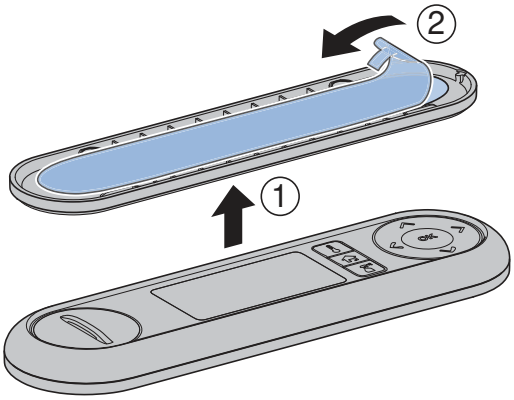

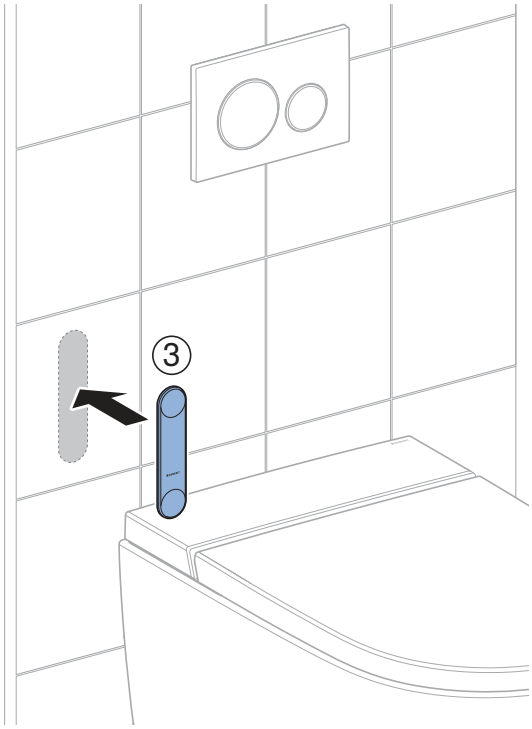

2

✓

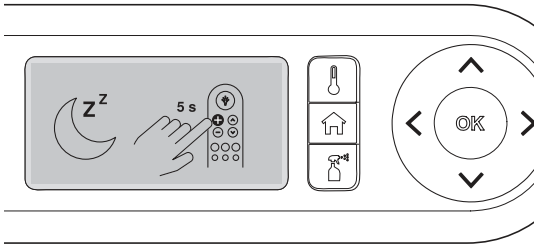

1

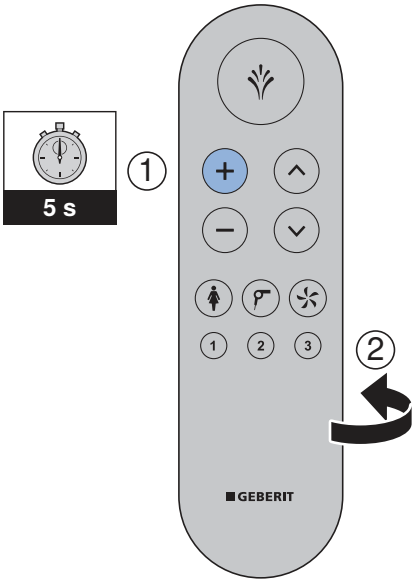

2

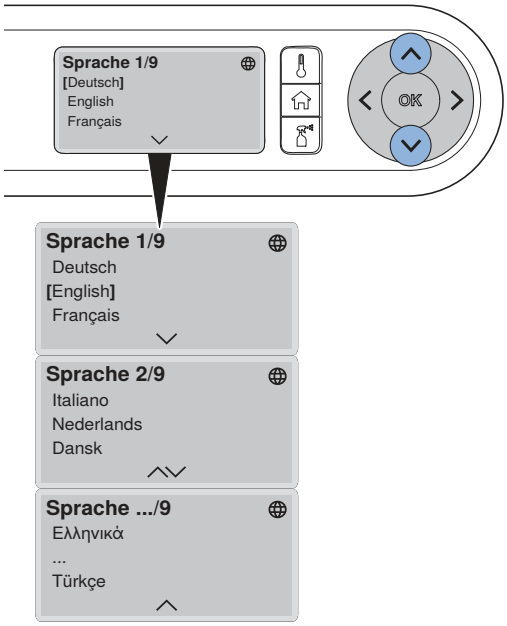

3

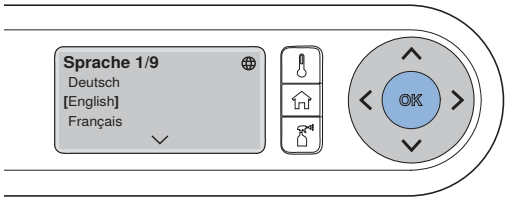

9007214266576139 © 07-2026
973.004.00.0(00)

3

1

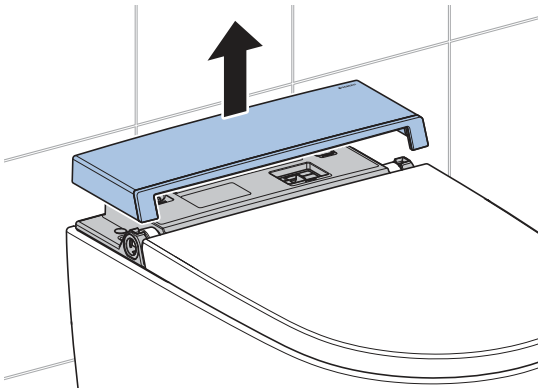

2

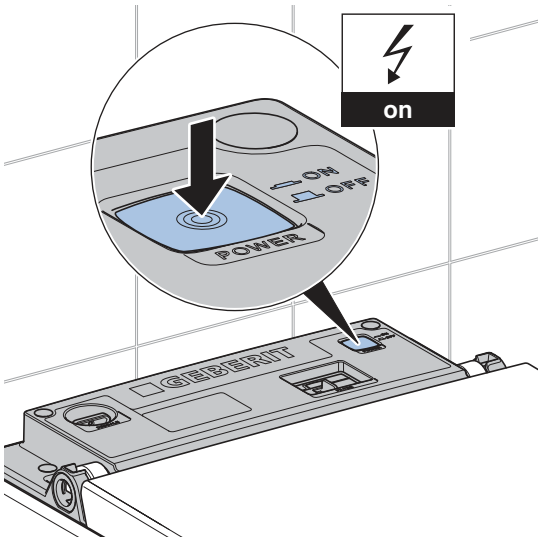
on
ON
OFF
POWER
GEBERIT

3

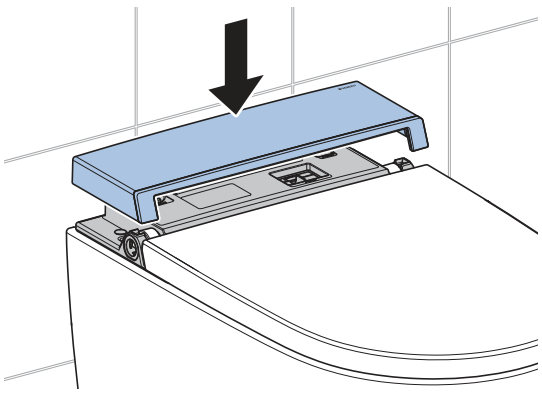

4

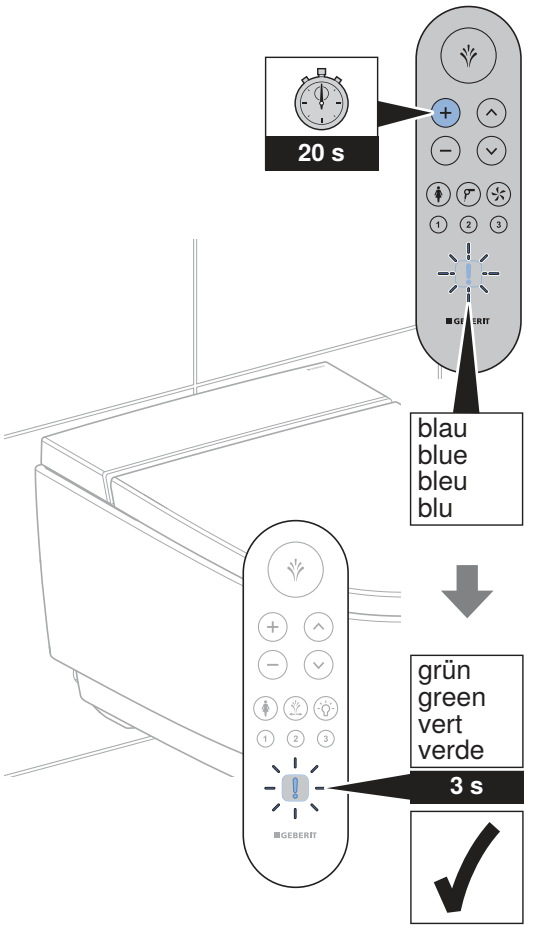
20 s
blau
blue
bleu
blu
grün
green
vert
verde
3 s

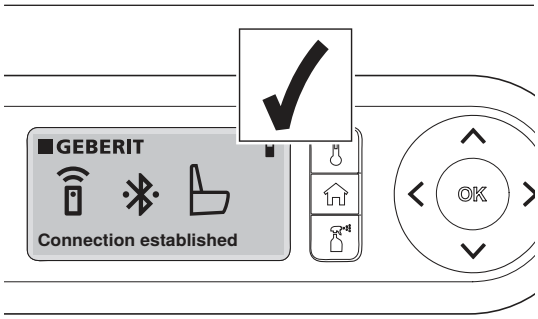
GEBERIT
Connection established
OK

4

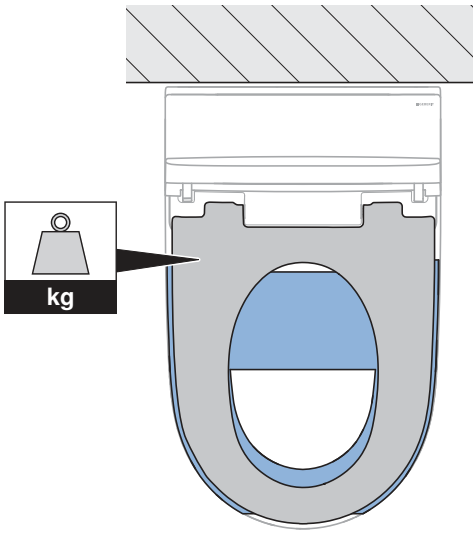

1

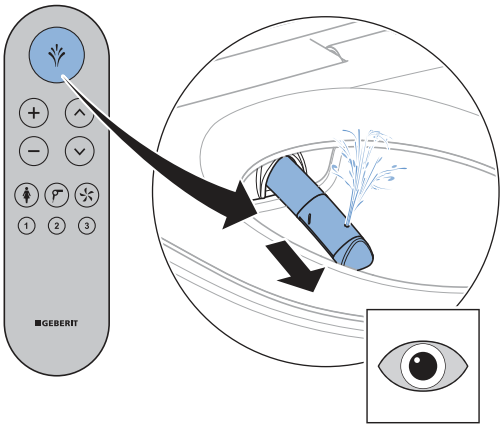

2

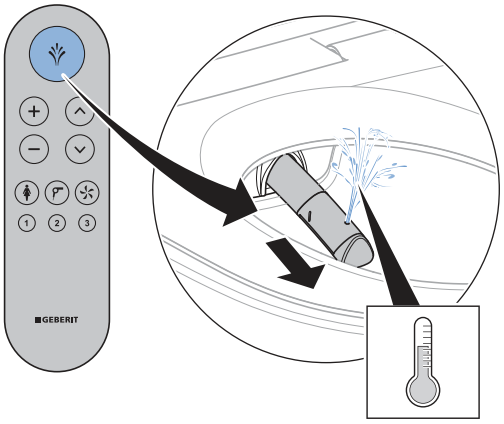

3

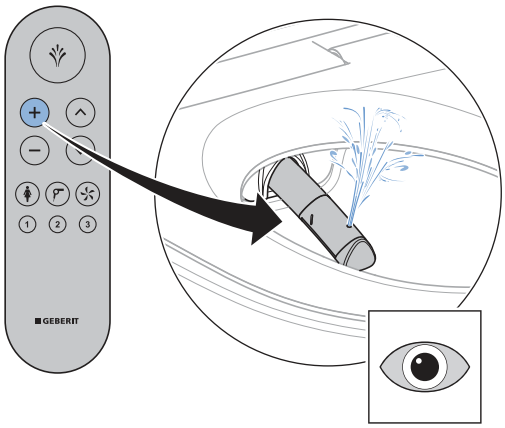

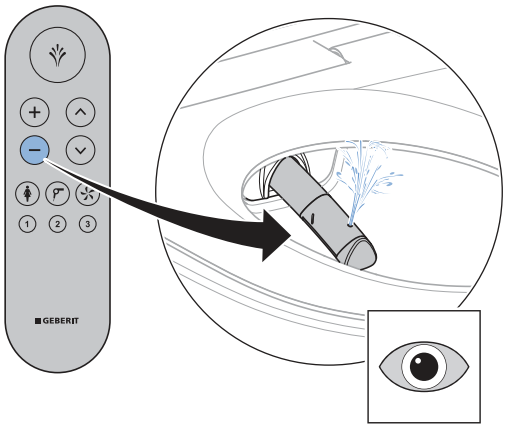

4

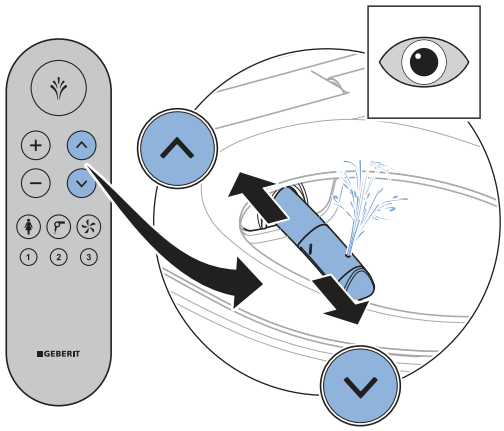

9007214266576139 © 07-2026

5

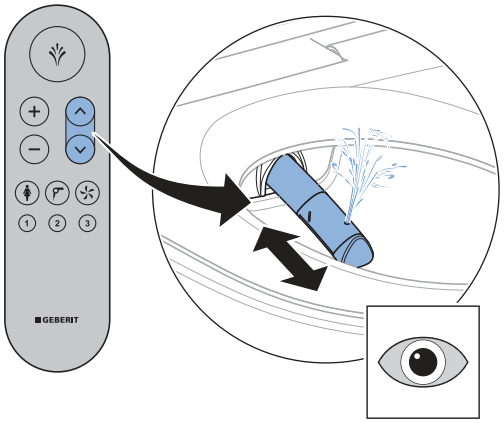

6

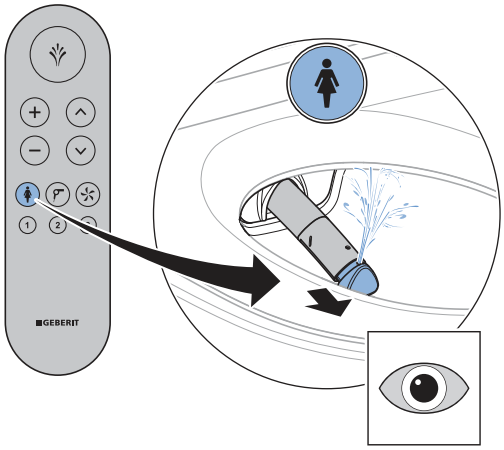

7

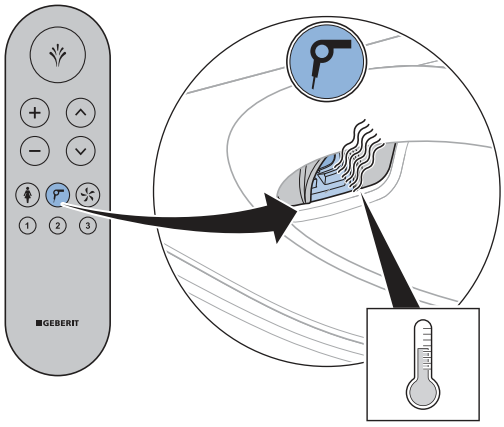

8

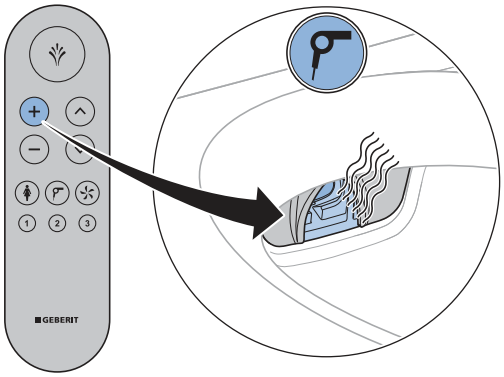

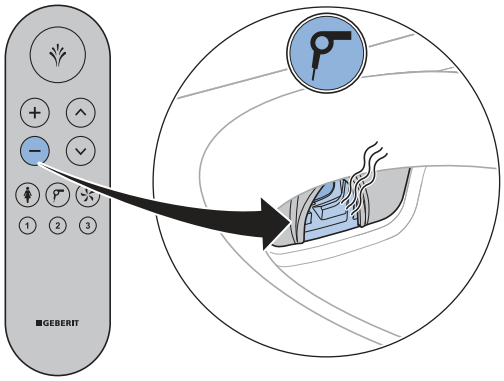

9



5

✓

AquaClean Mera Comfort

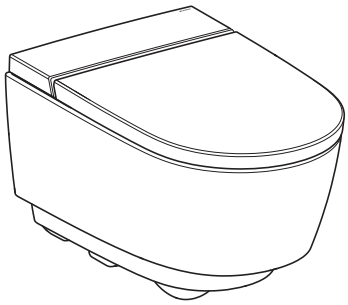

1



2

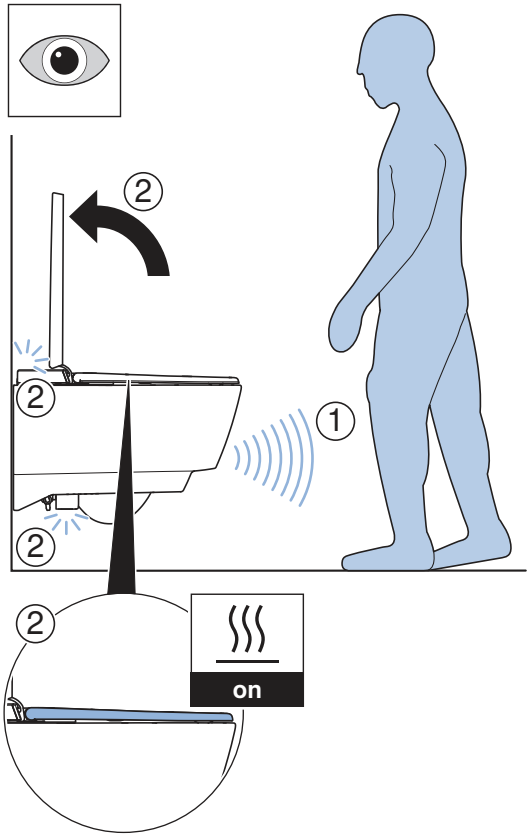

3

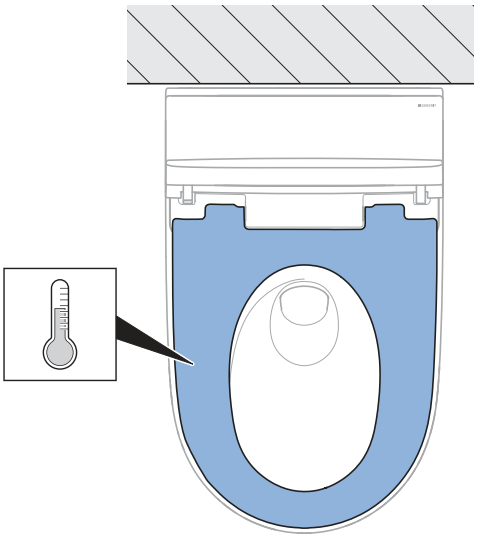

9007214266576139 © 07-2026

4

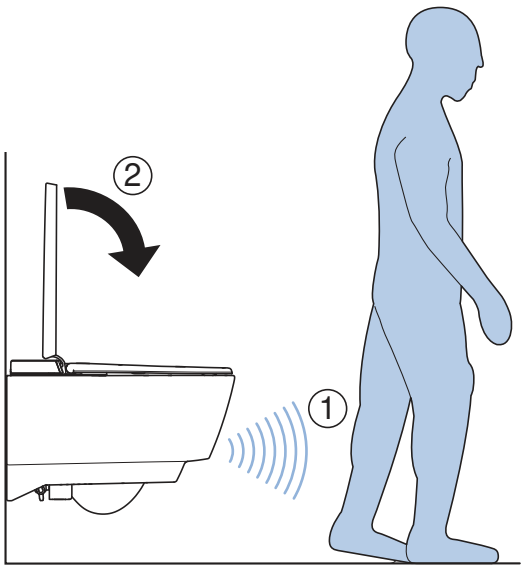

6

▶



Geberit International AG
Schachenstrasse 77, CH-8645 Jona
documentation@geberit.com
www.geberit.com

9007214266576139 © 07-2026
973.004.00.0(00)