GEBERIT DUOFIX

GEBERIT

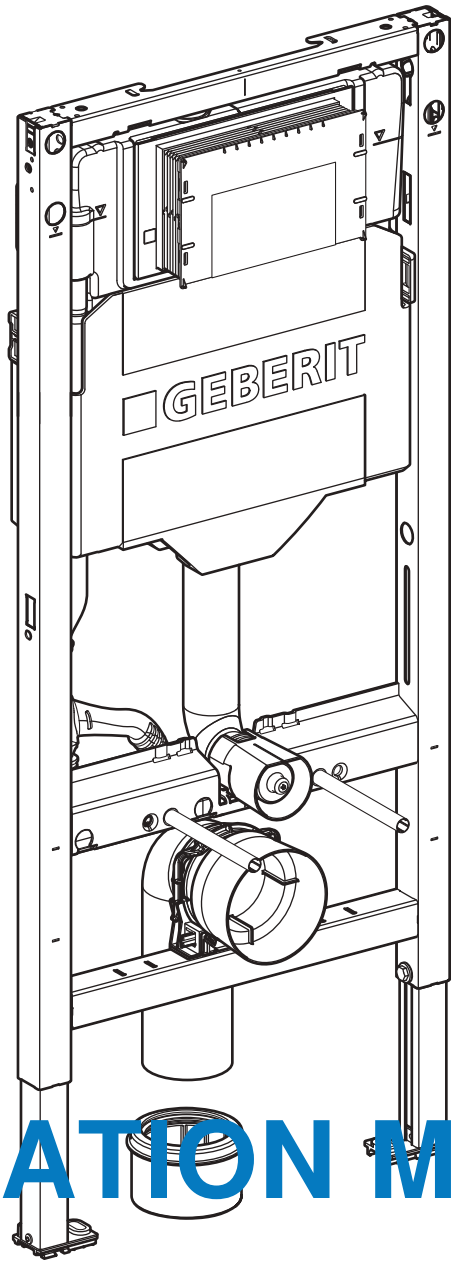

INSTALLATION MANUAL

MONTAGEANLEITUNG
INSTRUCTIONS DE MONTAGE
ISTRUZIONI PER IL MONTAGGIO

KNOW HOW INSTALLED

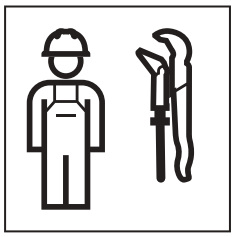

972.300.00.0(00)

cm

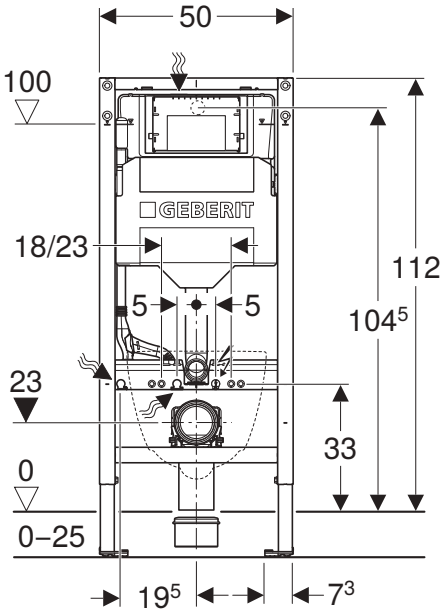

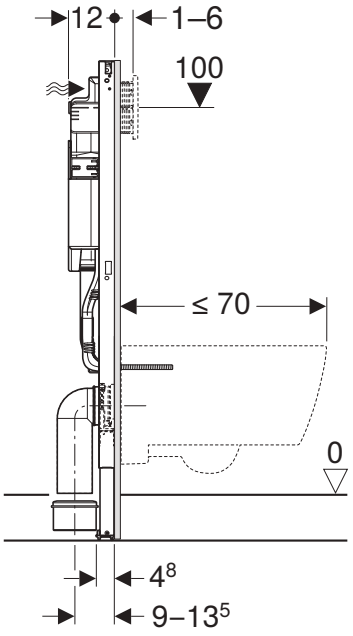

1

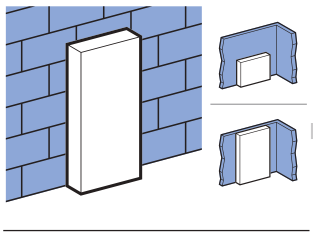

1 A 3

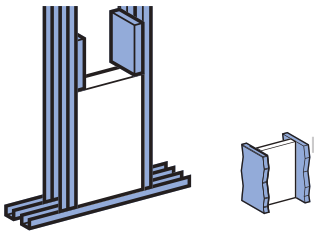

1 B 6

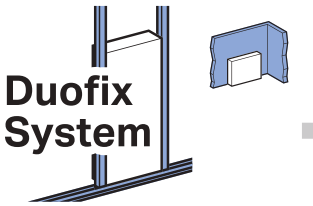

1 C 9

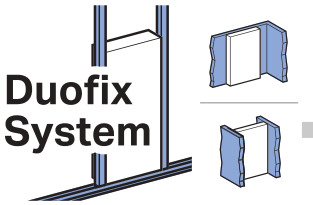

1 D 13

9007212258679819 © 07-2024
972.300.00.0(00)

1 A

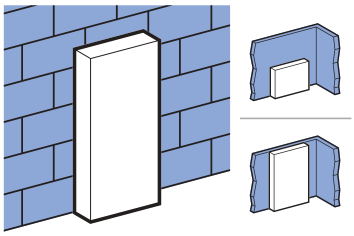

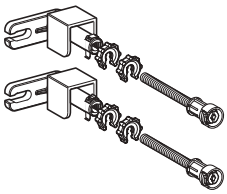

111.815.00.1

✓

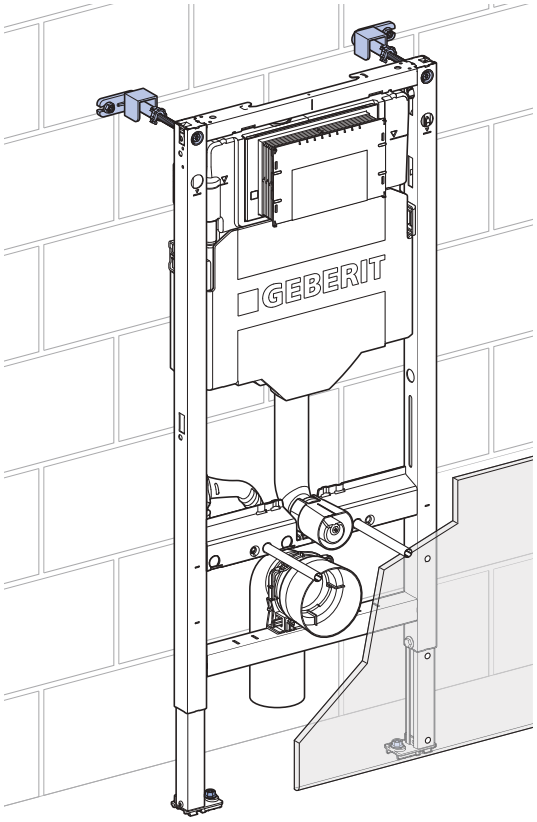

✓

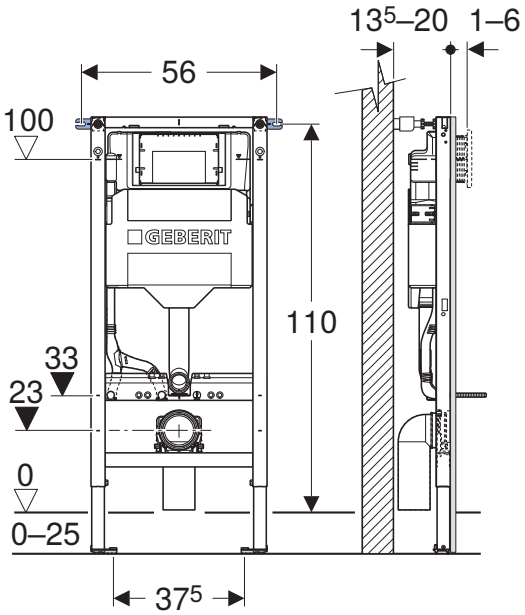

1

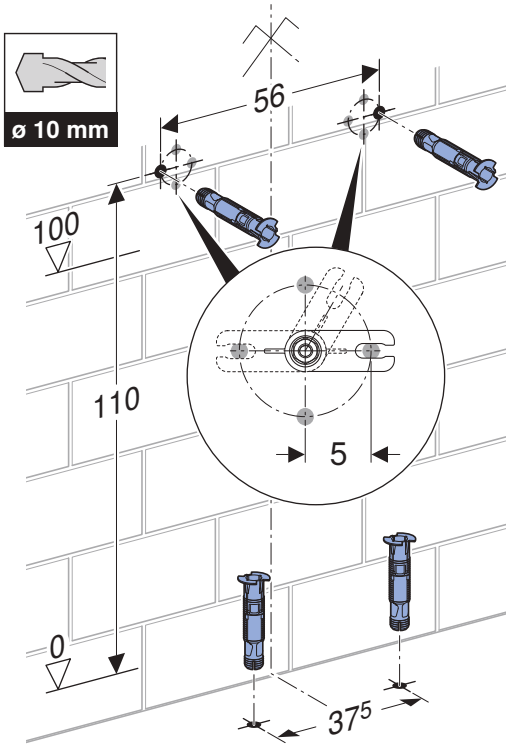

2

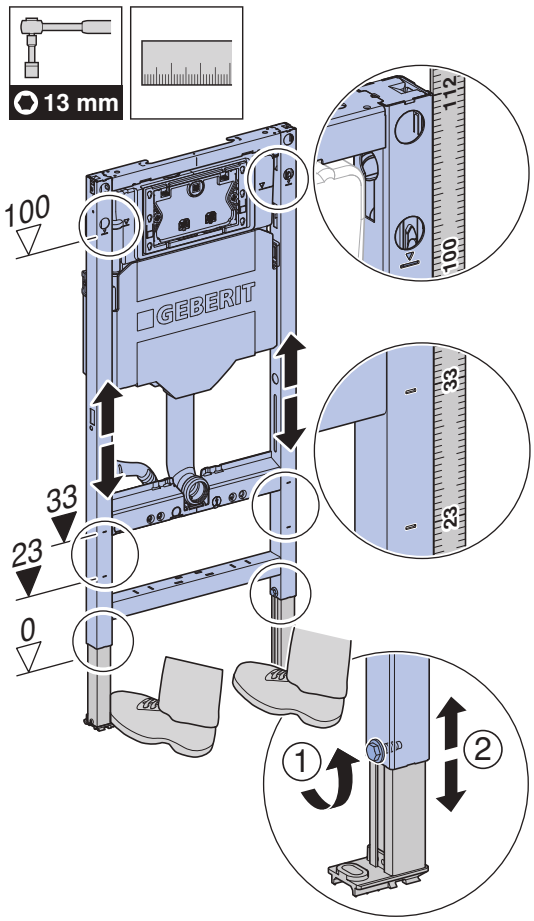

3

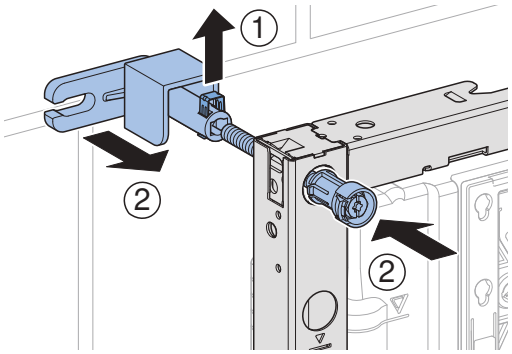

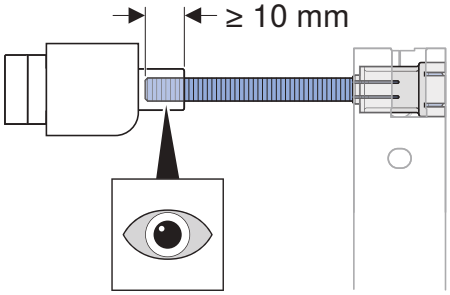

4

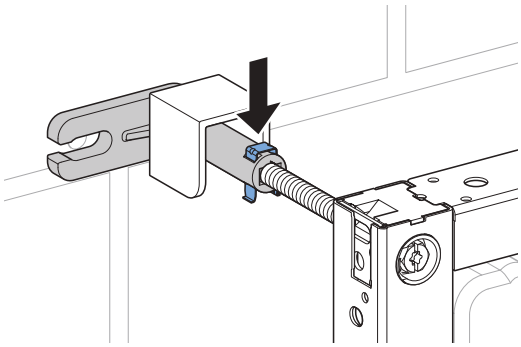

5

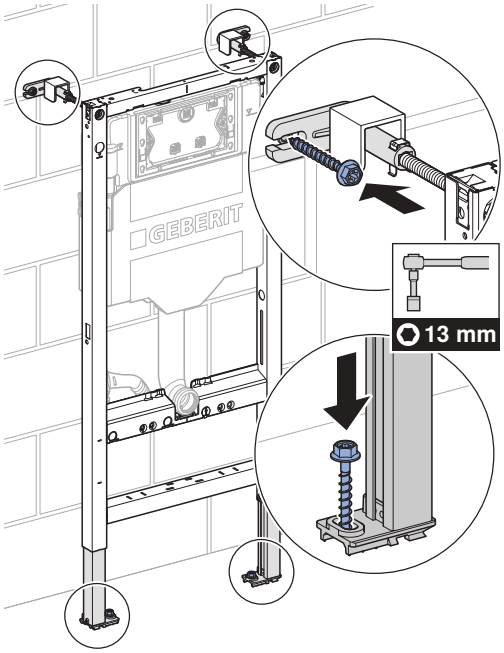

6

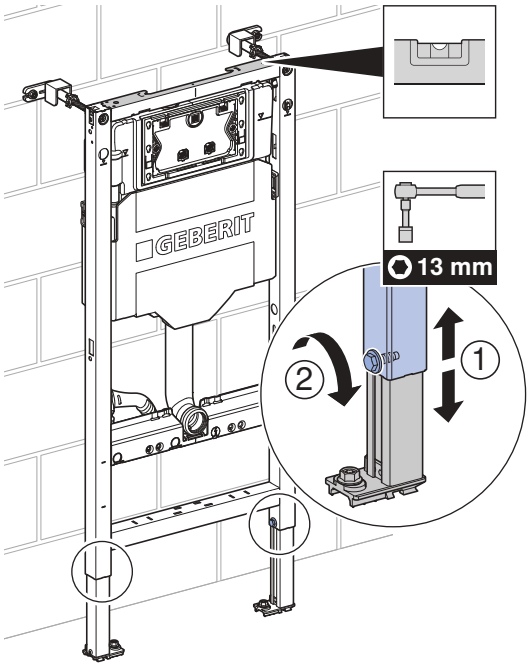

9007212258679819 © 07-2024
972.300.00.0(00)

7

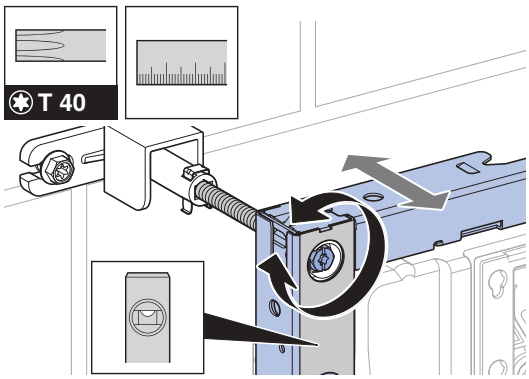

8

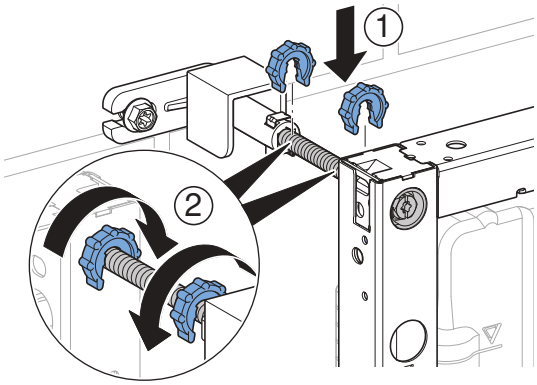

2 16

1 B

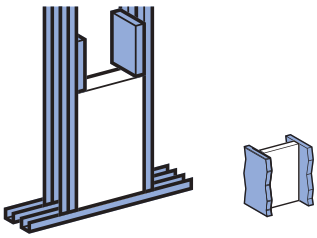

✓

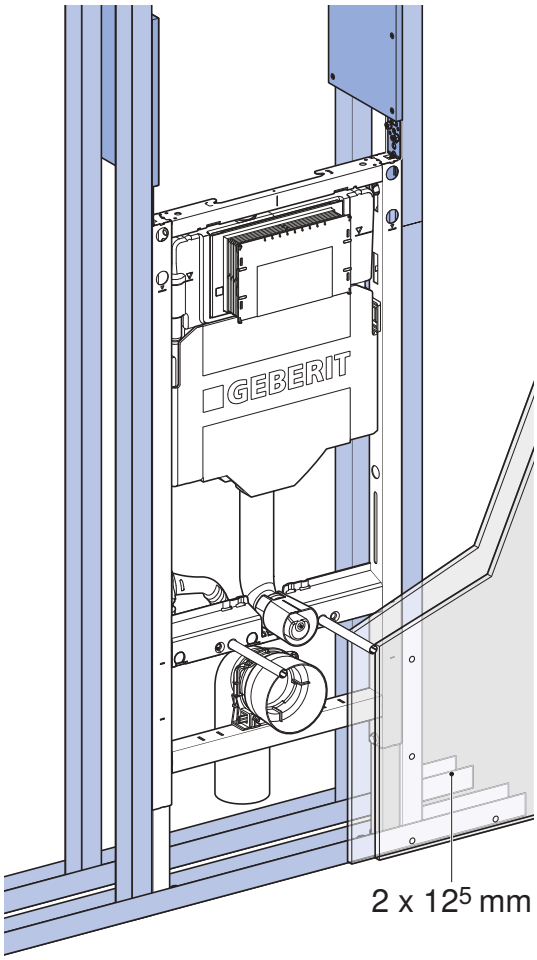

✓

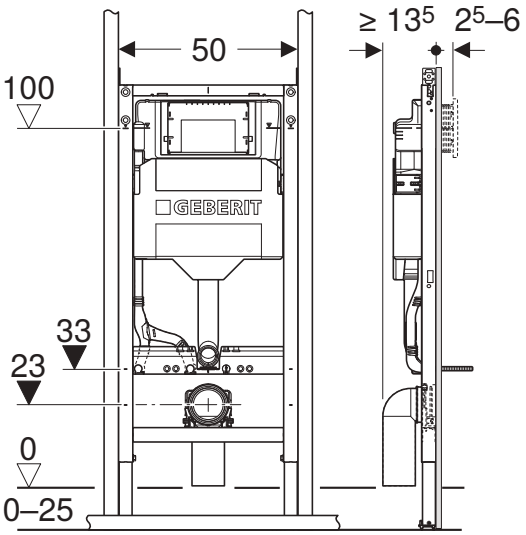

1

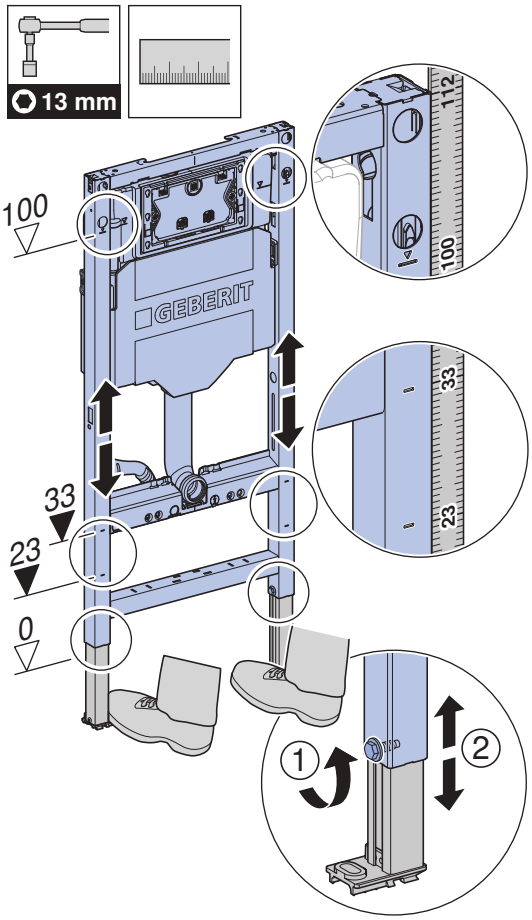

9007212258679819 © 07-2024
972.300.00.0(00)

2

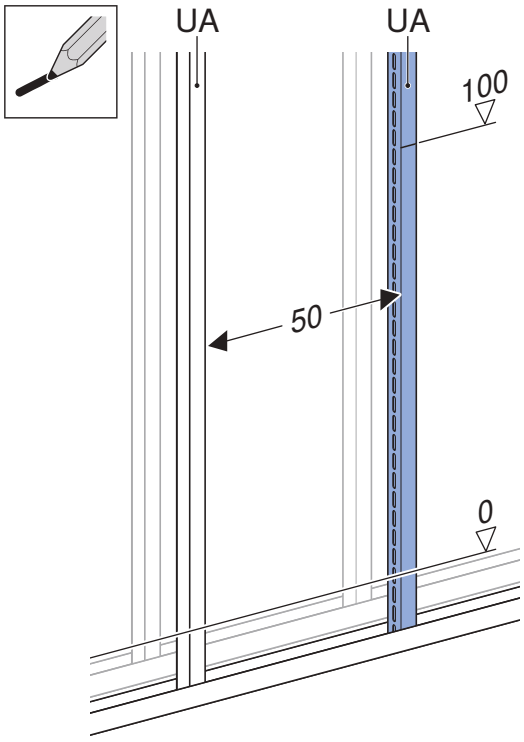

3

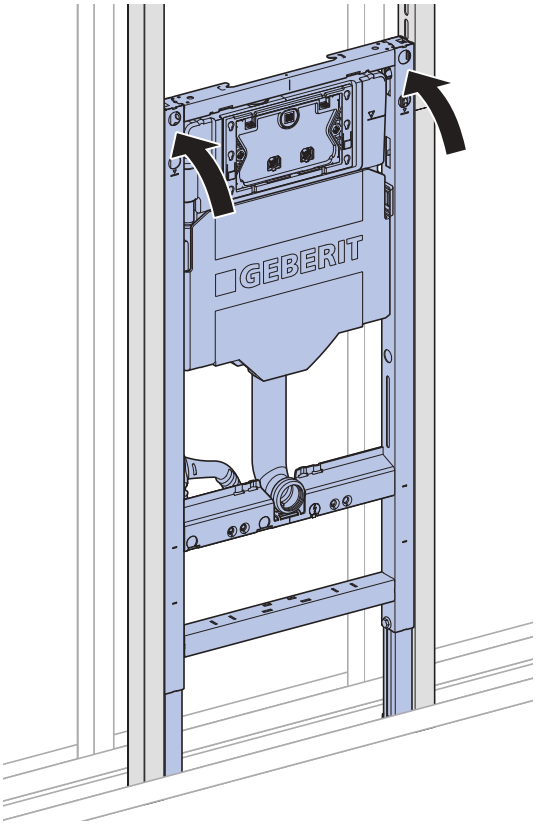

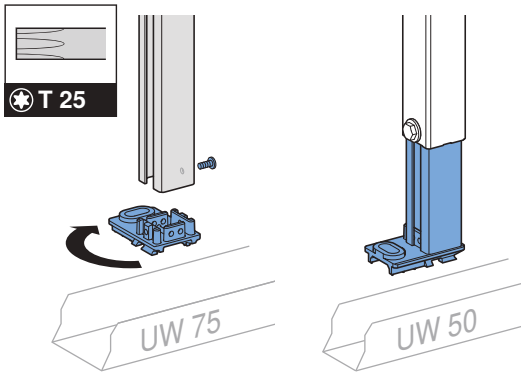

4

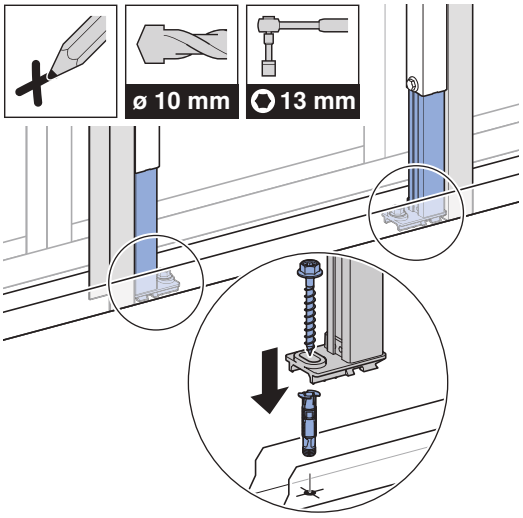

5

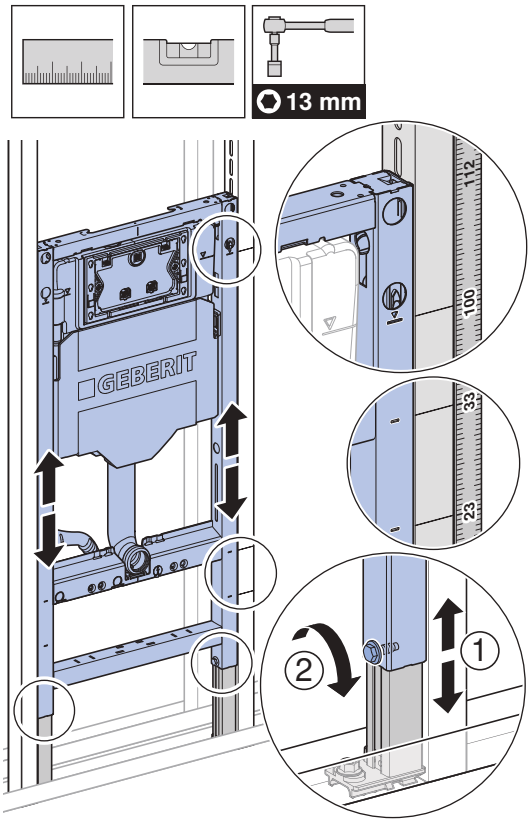

6

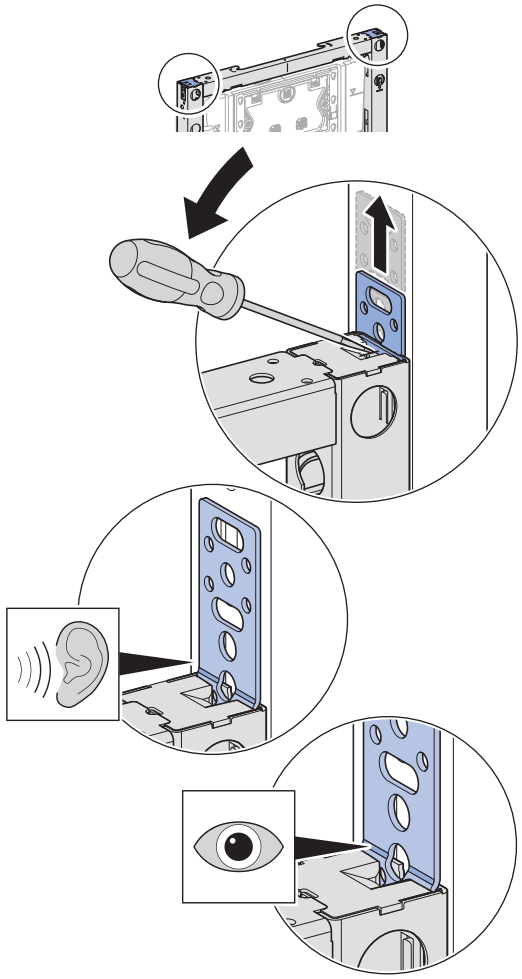

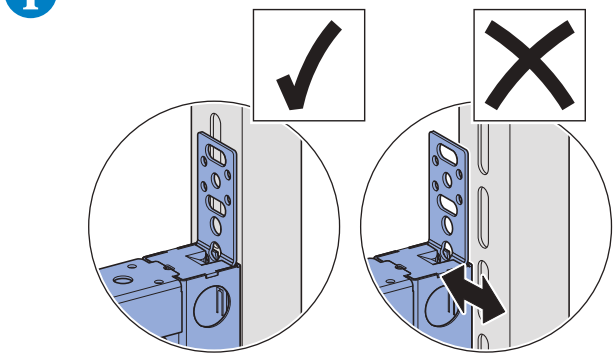

7

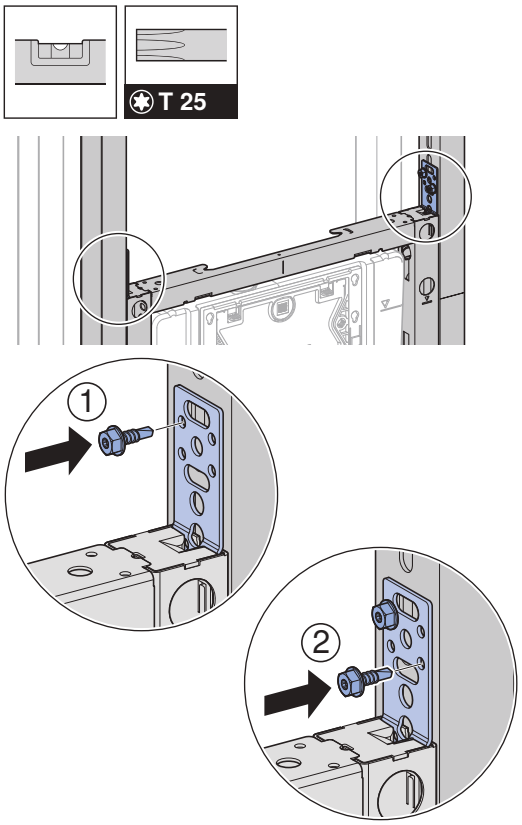

8

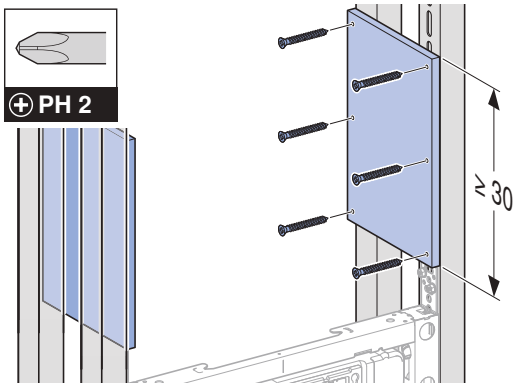

2 16

9007212258679819 © 07-2024
972.300.00.0(00)

1 C

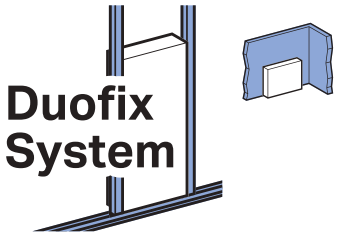
Duofix
System

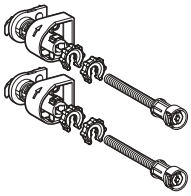


111.080.00.1

✓

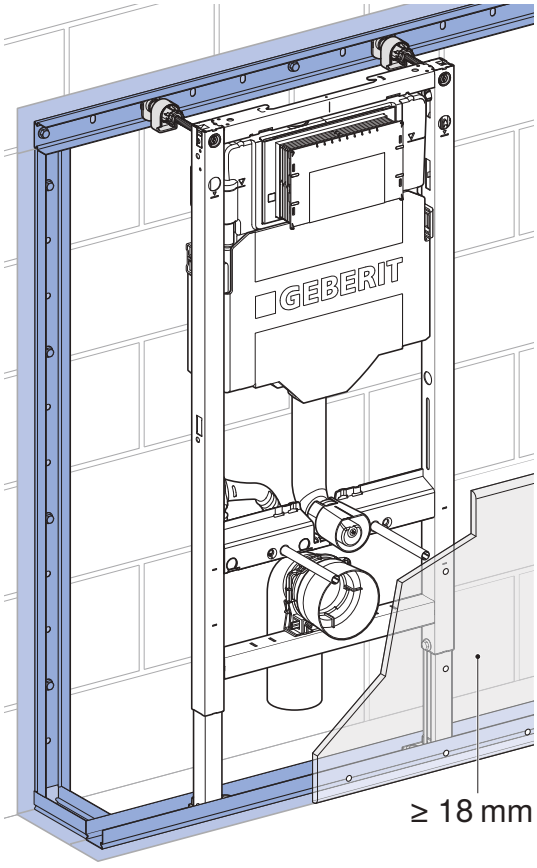
GEBERIT
≥ 18 mm

✓

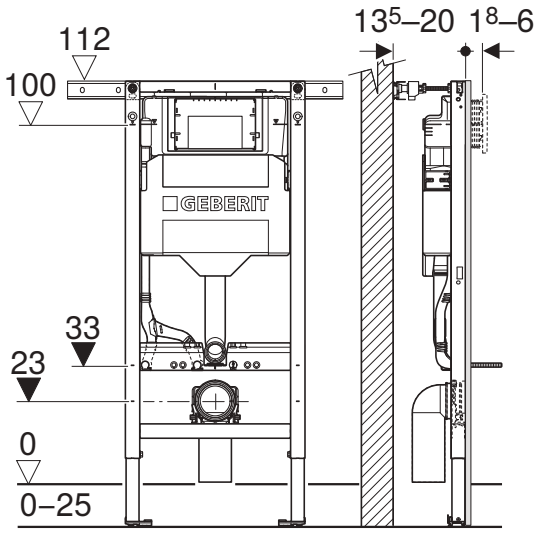
112
100
135–20
18–6
GEBERIT
33
23
0
0–25

1

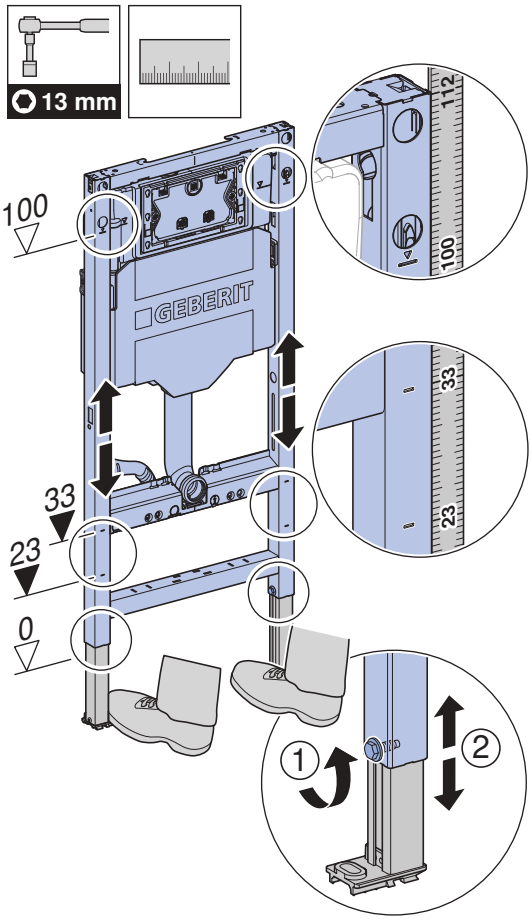
13 mm
112
100
GEBERIT
33
23
0
1
2

2

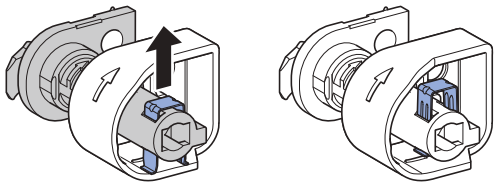

3

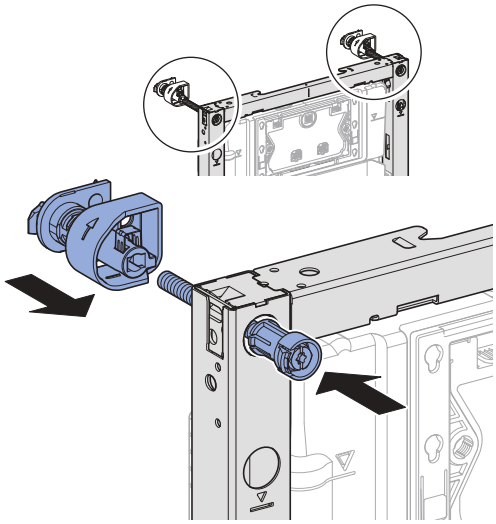

9007212258679819 © 07-2024
972.300.00.0(00)

4

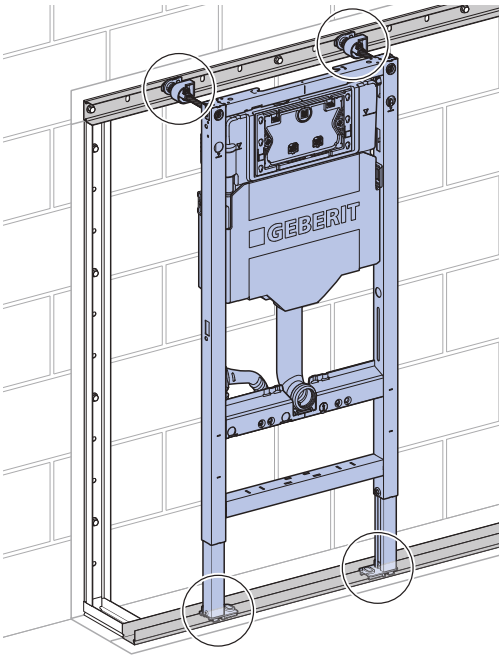

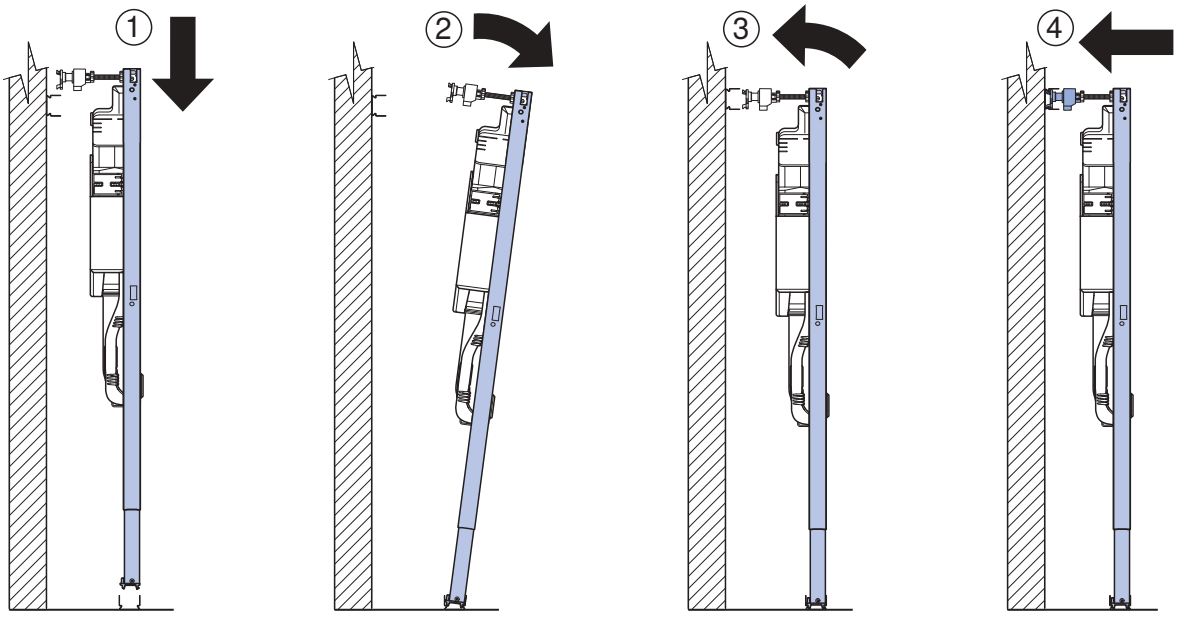

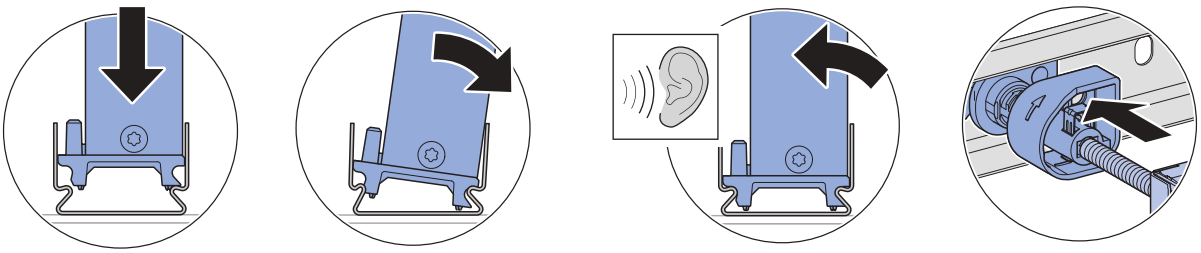

5

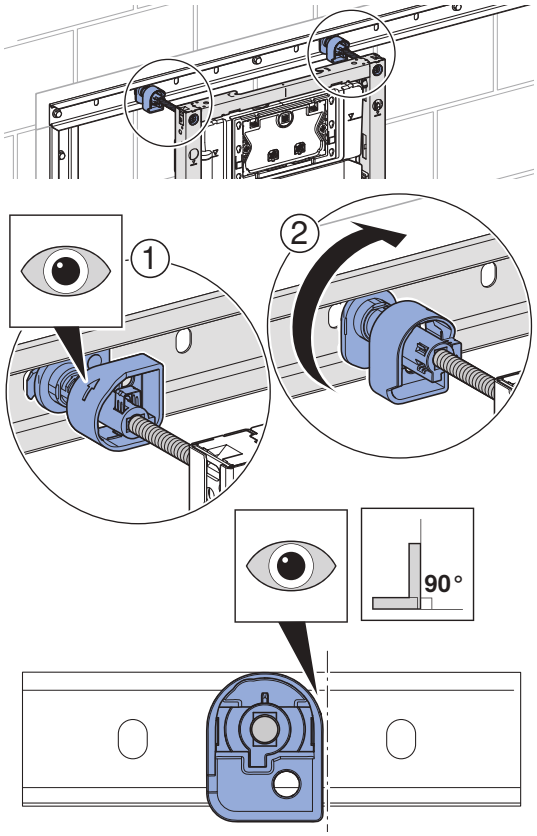

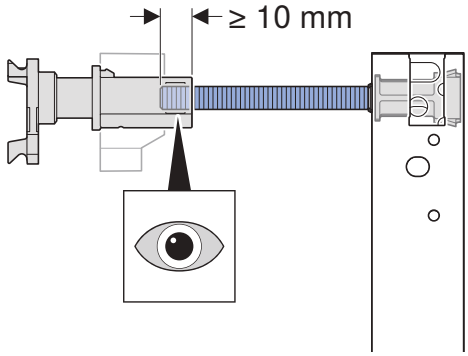

6

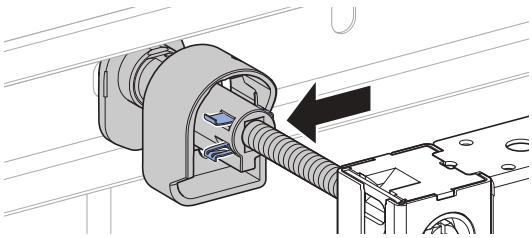

7

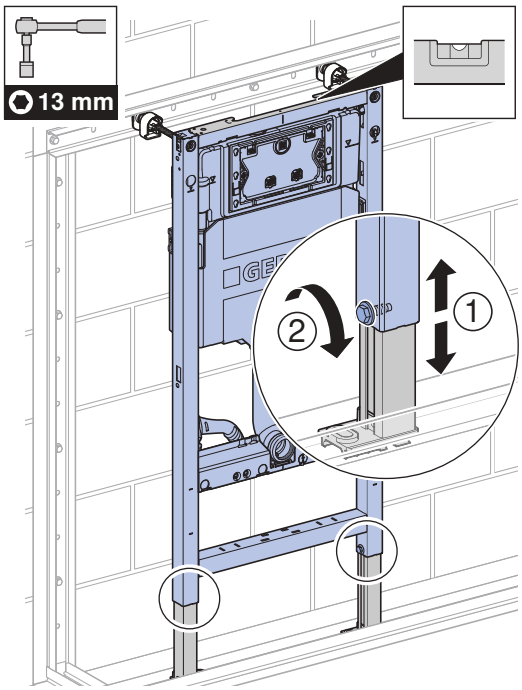

8

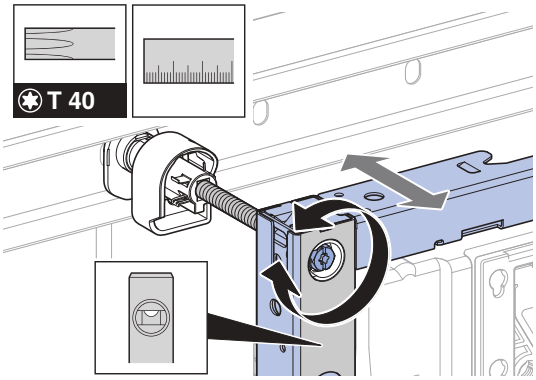

9

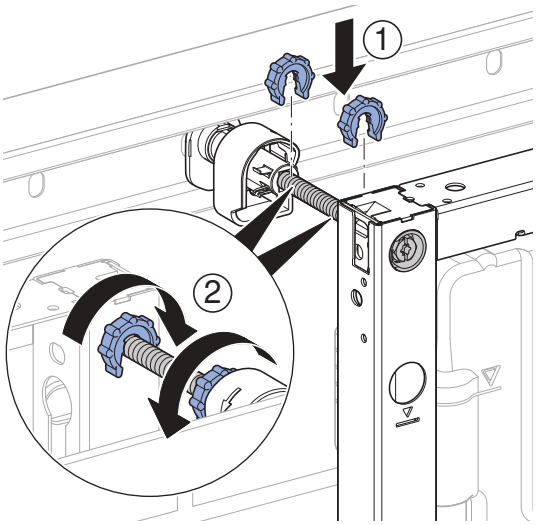

2 16

9007212258679819 © 07-2024
972.300.00.0(00)

1 D

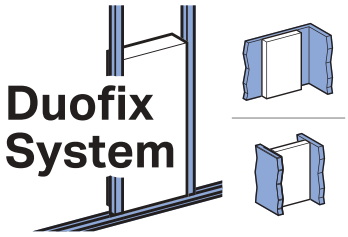

✓

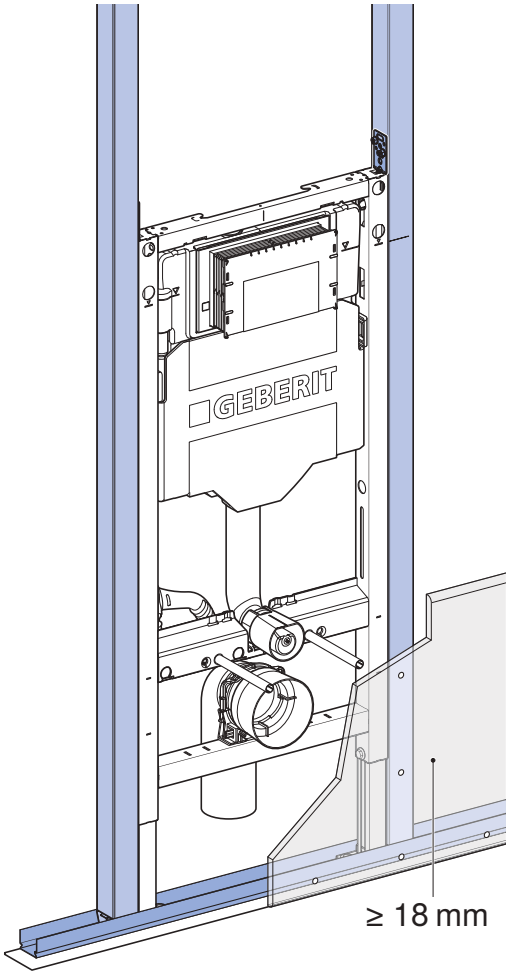

✓

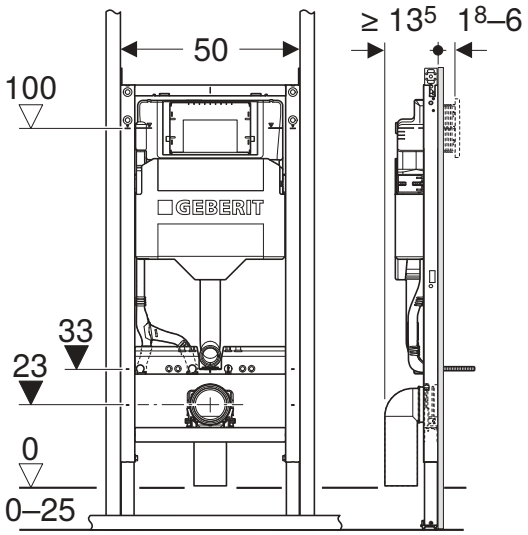

1

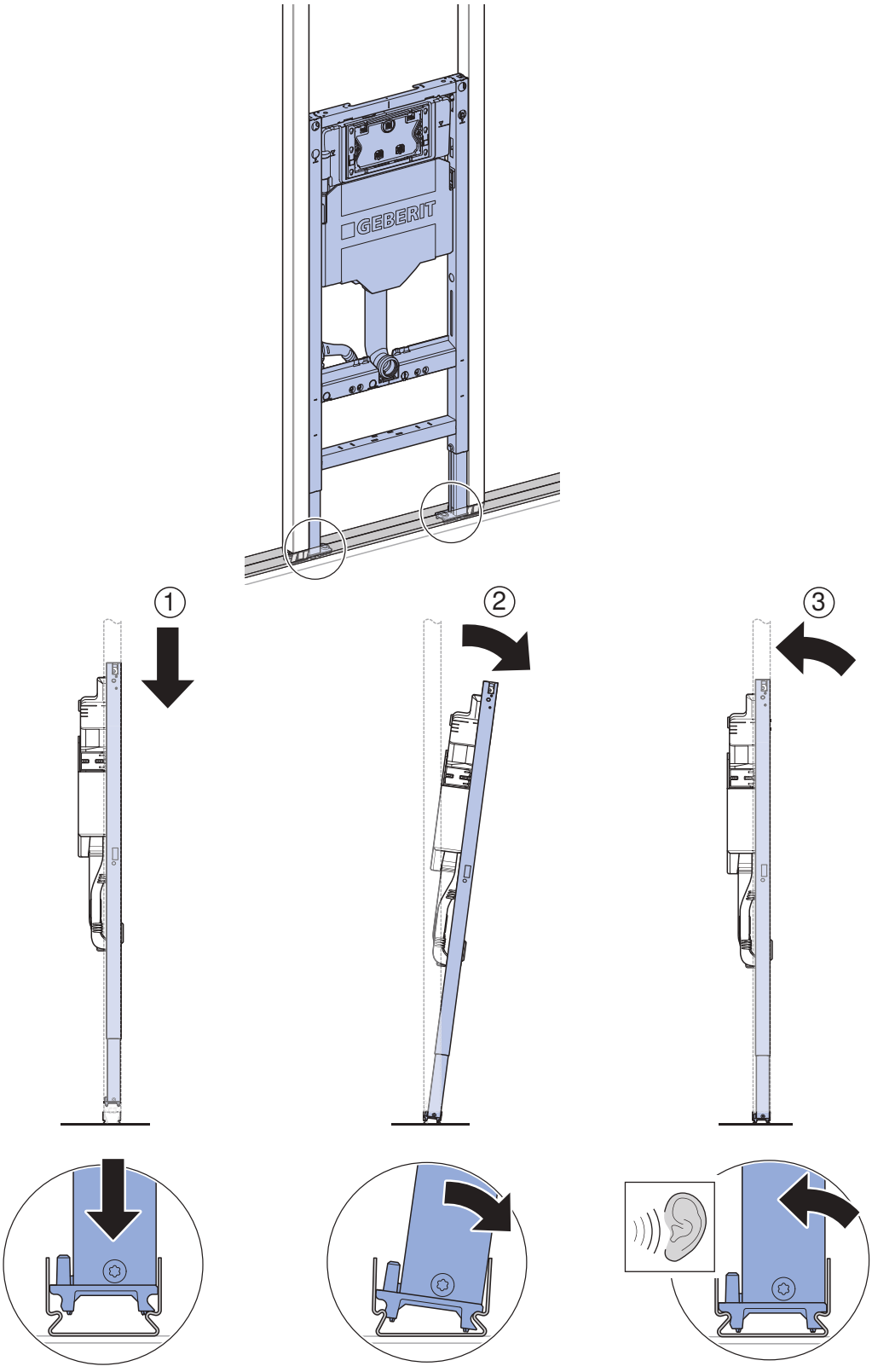

9007212258679819 © 07-2024
972.300.00.0(00)

2

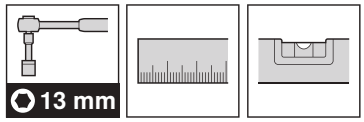

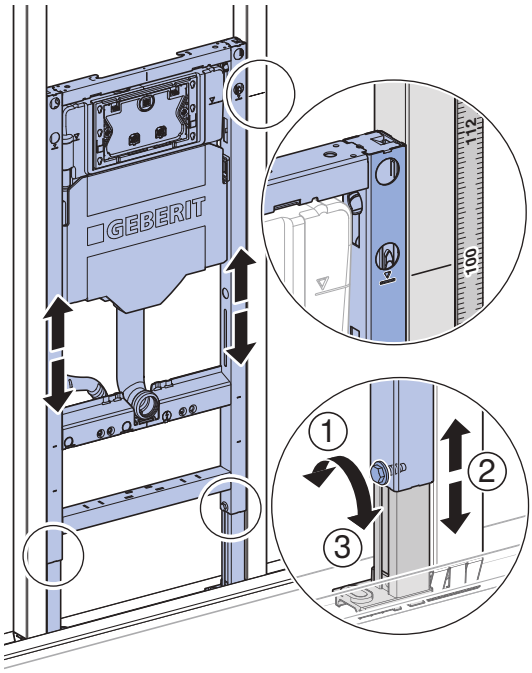

3

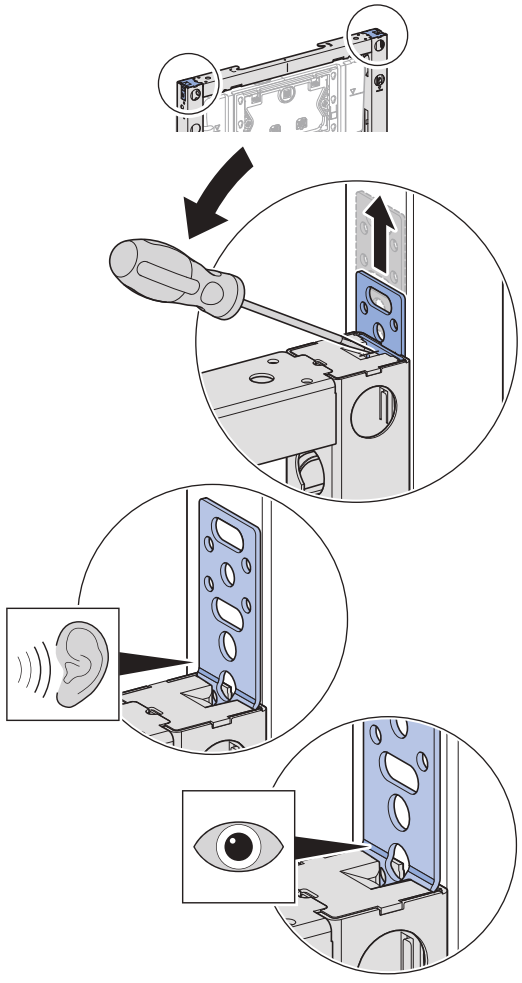

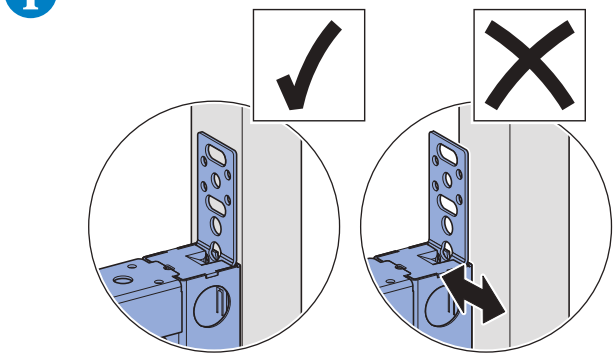

4

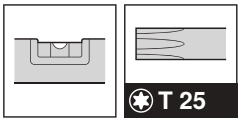

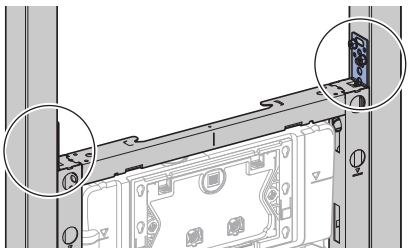

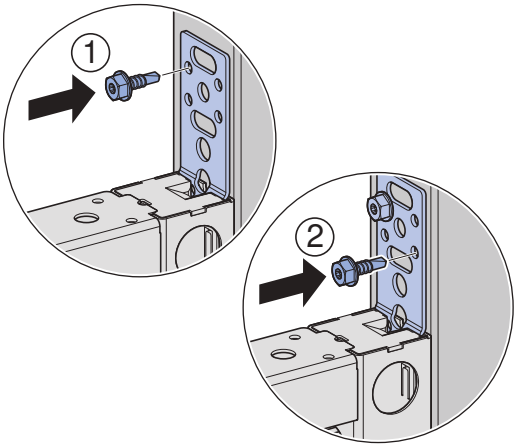

2

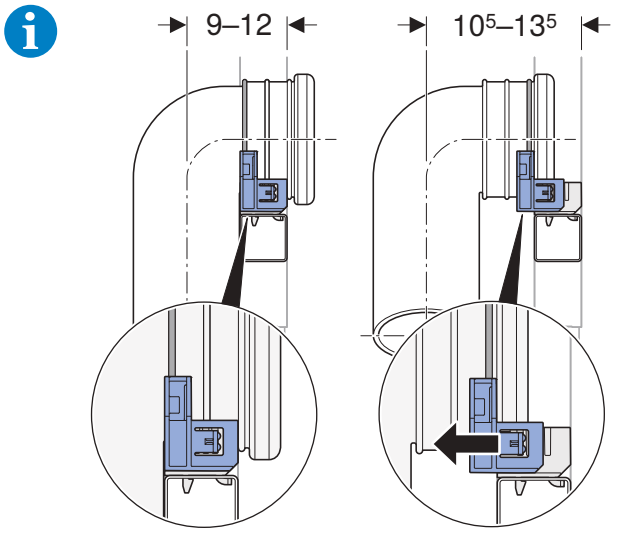

1

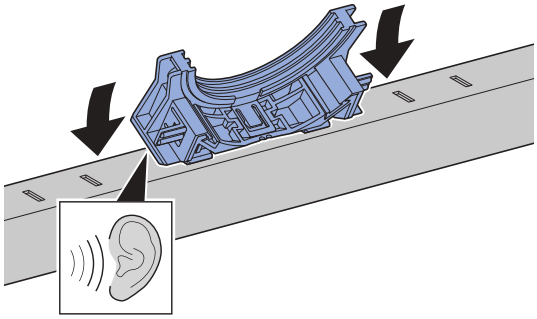

2

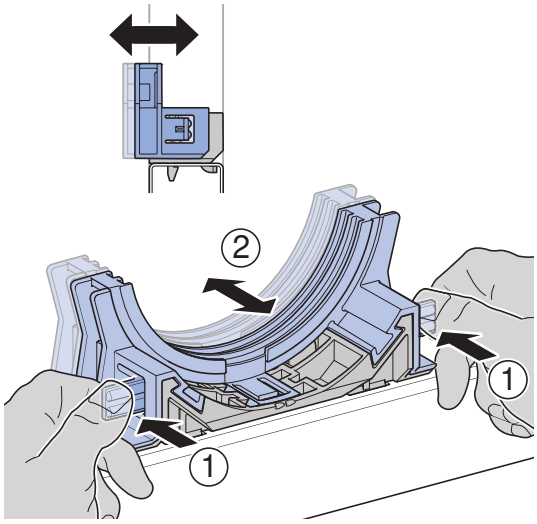

3

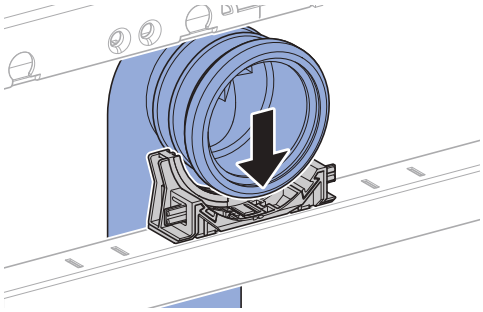

4

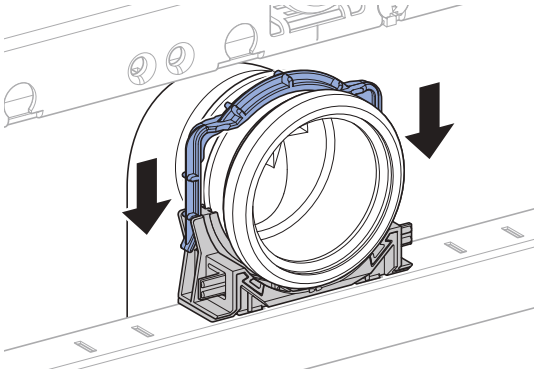

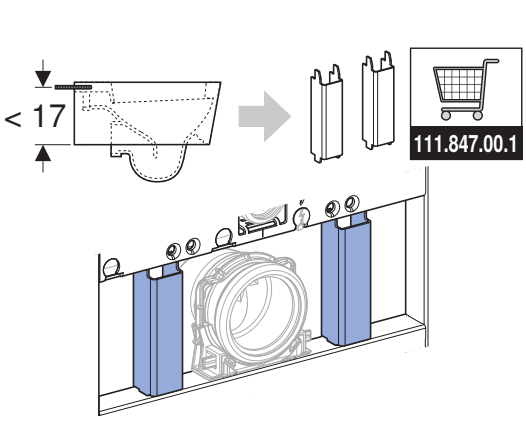

9007212258679819 © 07-2024
972.300.00.0(00)

5

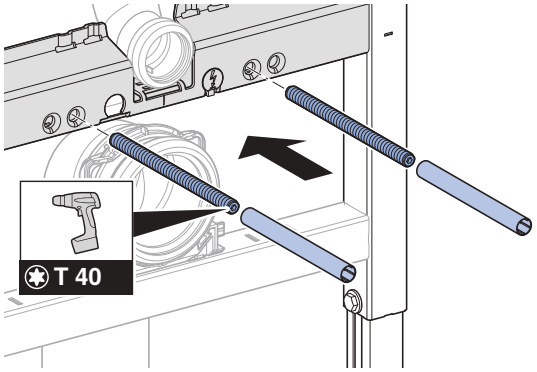

6

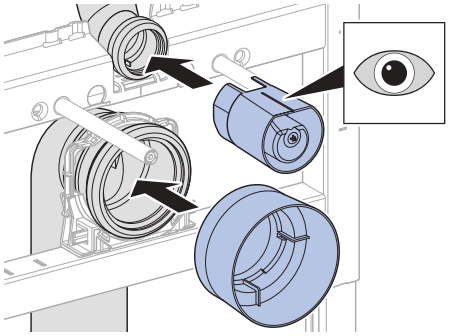

3

1

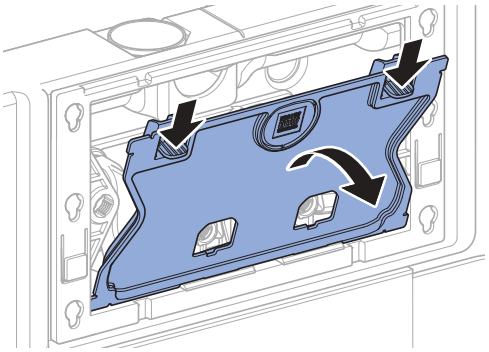

2

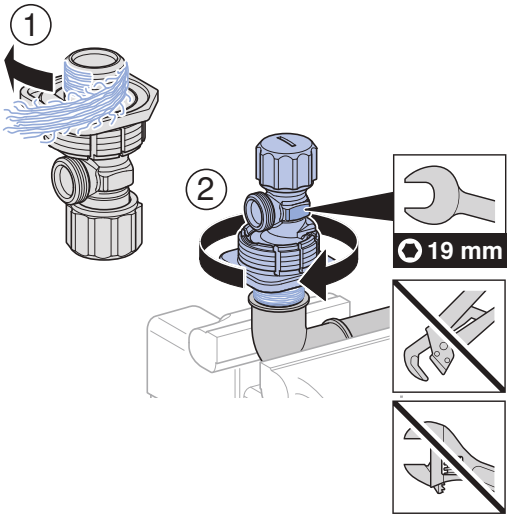

3

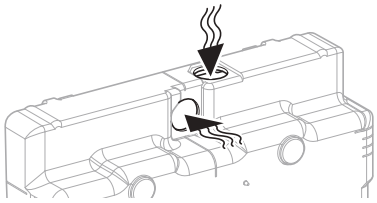

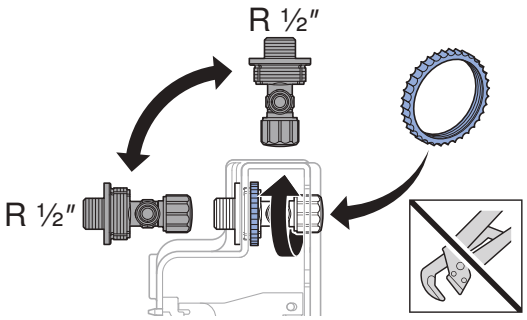

4

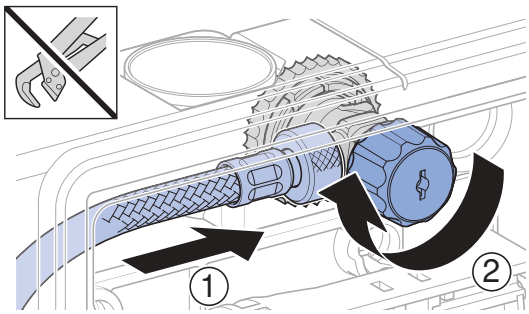

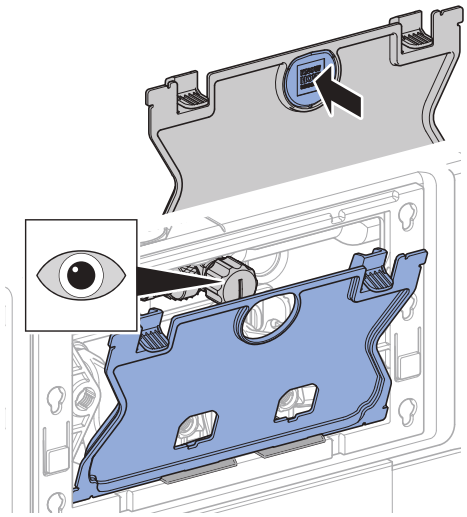

5

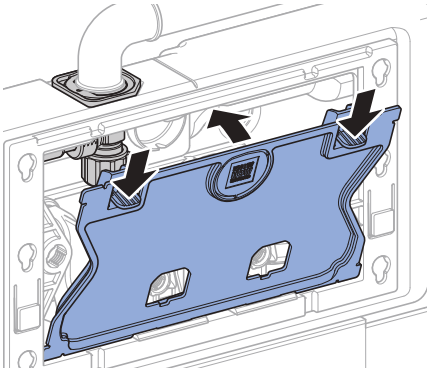

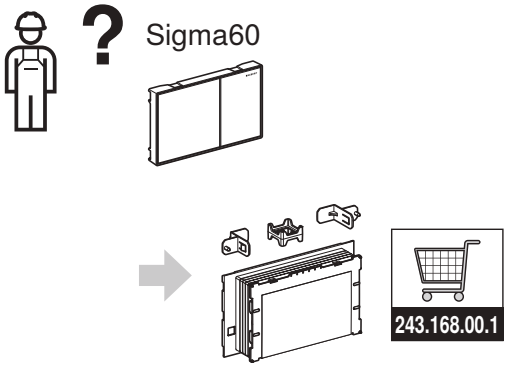

6

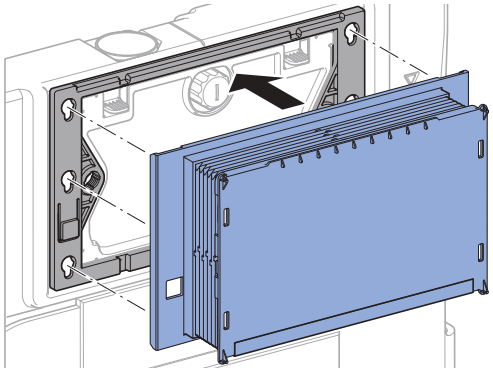

7

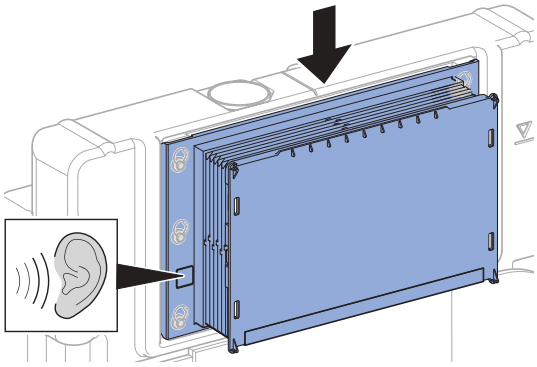

9007212258679819 © 07-2024
972.300.00.0(00)

4

✓



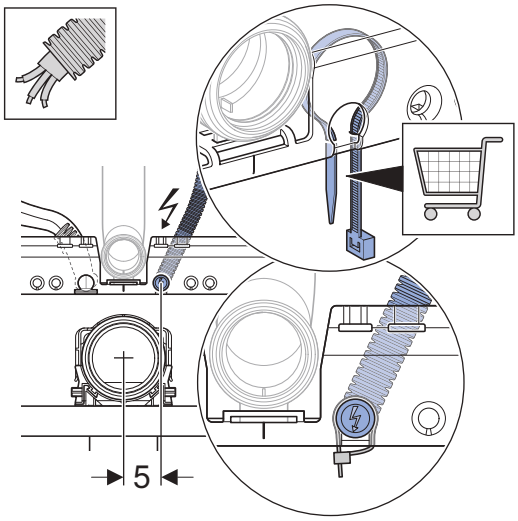

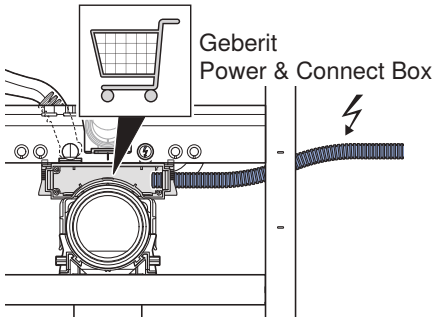

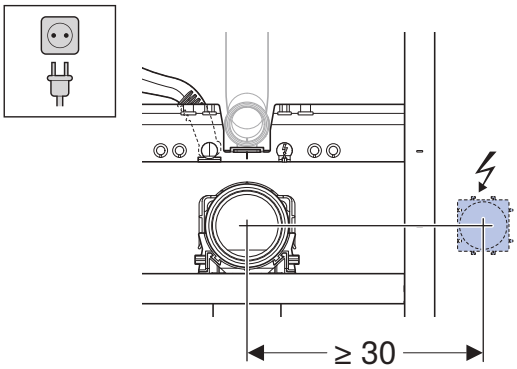

5

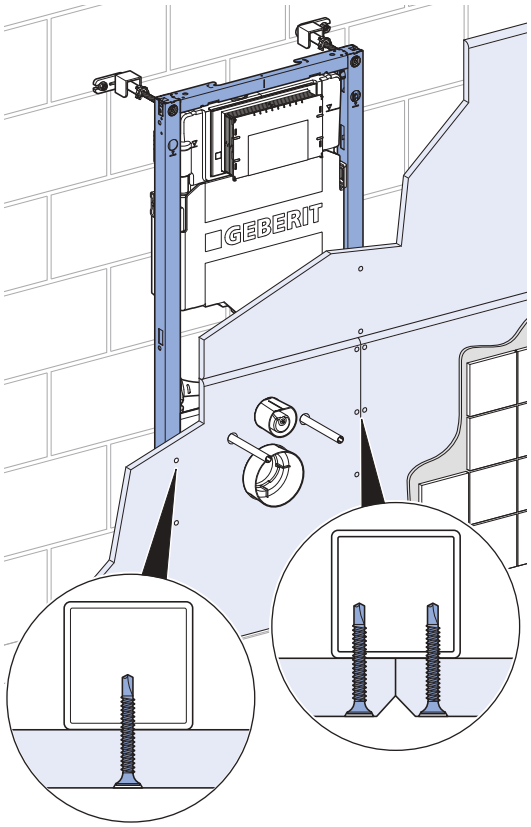

1

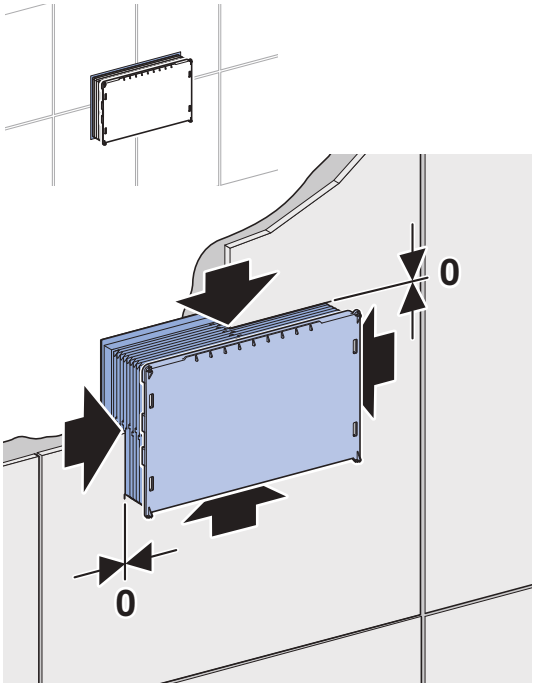

Geberit International AG
Schachenstrasse 77, CH-8645 Jona
documentation@geberit.com
www.geberit.com

9007212258679819 © 07-2024
972.300.00.0(00)