GEBERIT




# GIS Installation System

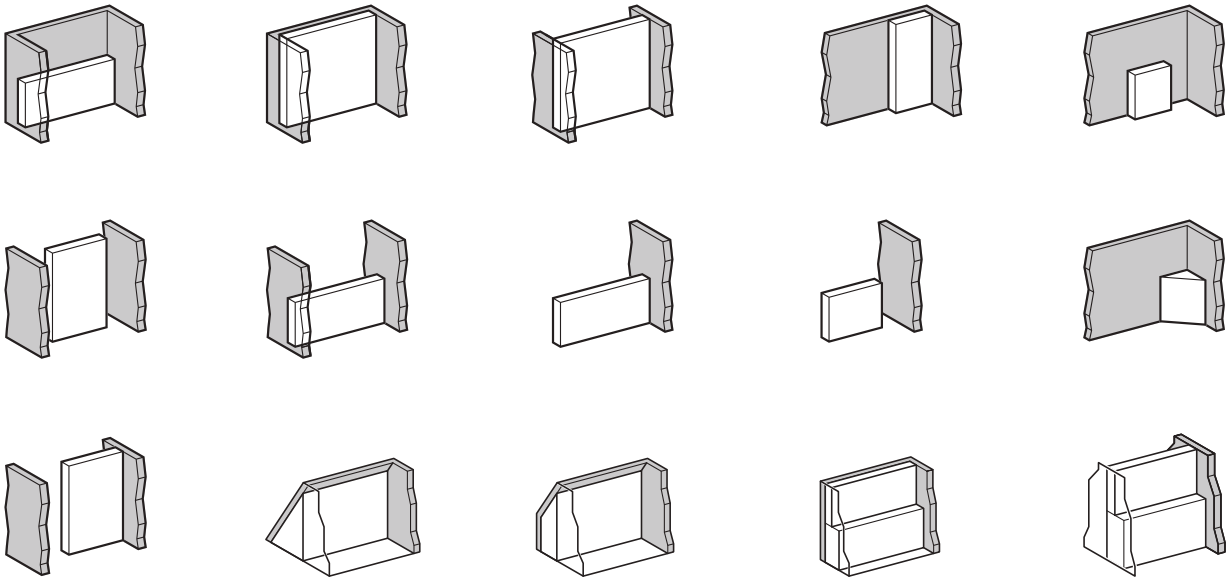

# INSTALLATION MANUAL

MONTAGEANLEITUNG
INSTRUCTIONS DE MONTAGE
ISTRUZIONI PER IL MONTAGGIO

KNOW HOW INSTALLED

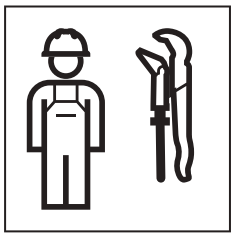

964.124.00.0(07)

36028805360494219 © 05-2025
964.124.00.0(07)


4


13



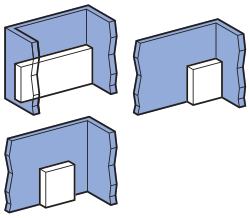
1 18

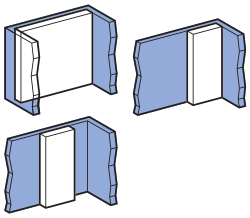
4 21

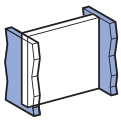
7 24

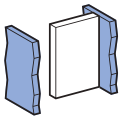
10 27

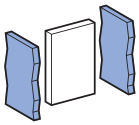
13 30

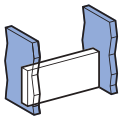
15 32

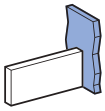
17 34

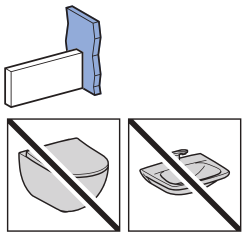
18 35

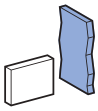
19 36

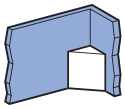
20 37

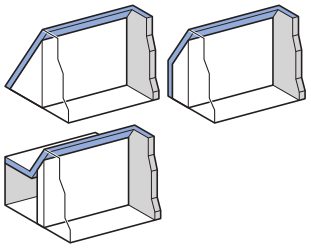
21 38

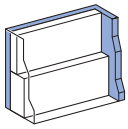
22 39

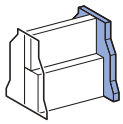
23 40

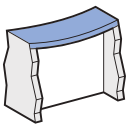
24 41

cm

| | H | B | T |
|---|---|---|---|
| 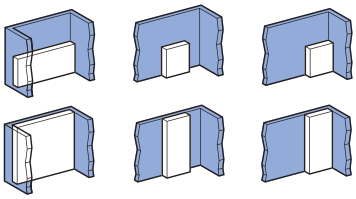 | ≤ 600 | ∞ | 10–70 |
| 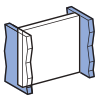 | ≤ 360 | ∞ | 13–70 |
| | ≤ 450 | ≤ 350 | 13–45 |
| | ≤ 600 | ∞ | 25–44 |
|  | ≤ 360 | ≤ 250 | 13–60 |
| | ≤ 600 | ≤ 500 | 25–44 |
|  | ≤ 360 | ≤ 250 | 13–60 |
| 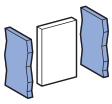 | ≤ 360 | ≤ 250 | 20–44 |
| | ≤ 600 | ≤ 500 | 25–44 |
|  | ≤ 360 | ≤ 250 | 13–45 |
|  | ≤ 360 | ≤ 250 | 13–45 |
| | ≤ 600 | ≤ 500 | 25–44 |
|  | ≤ 220 | ≤ 500 | 25–44 |
| 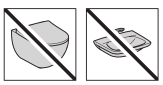 | ≤ 200 | ≤ 100 | 13–45 |
|  | ≤ 220 | ≤ 500 | 25–44 |


36028805360494219 © 05-2025
964.124.00.0(07)

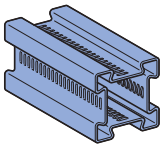

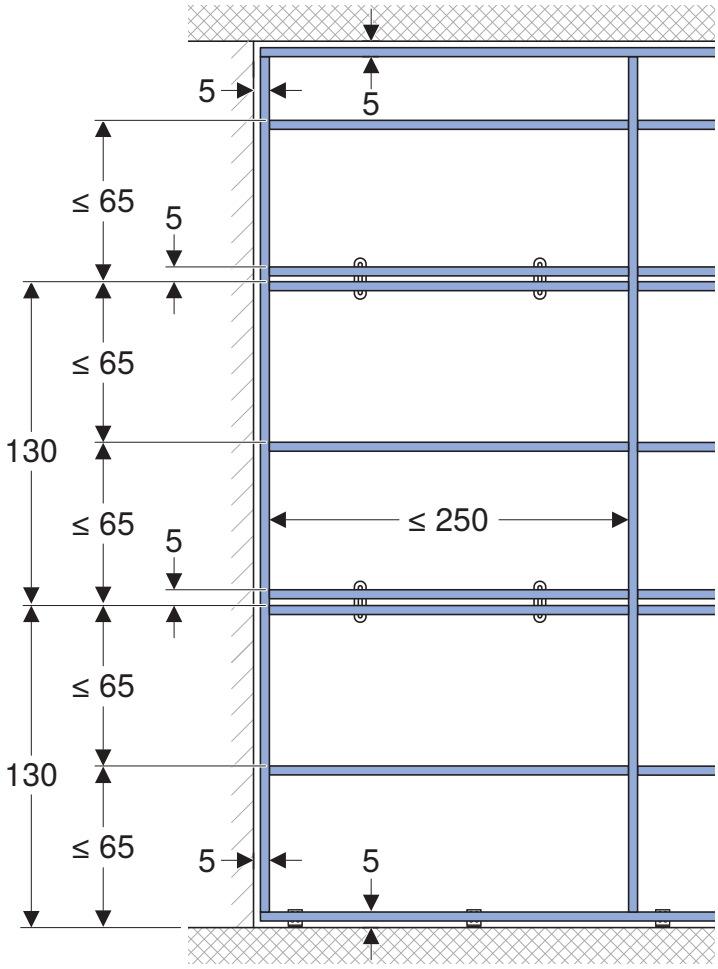
5
5
≤ 65
5
≤ 65
130
≤ 65
≤ 250
5
≤ 65
130
≤ 65
5
5

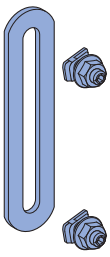

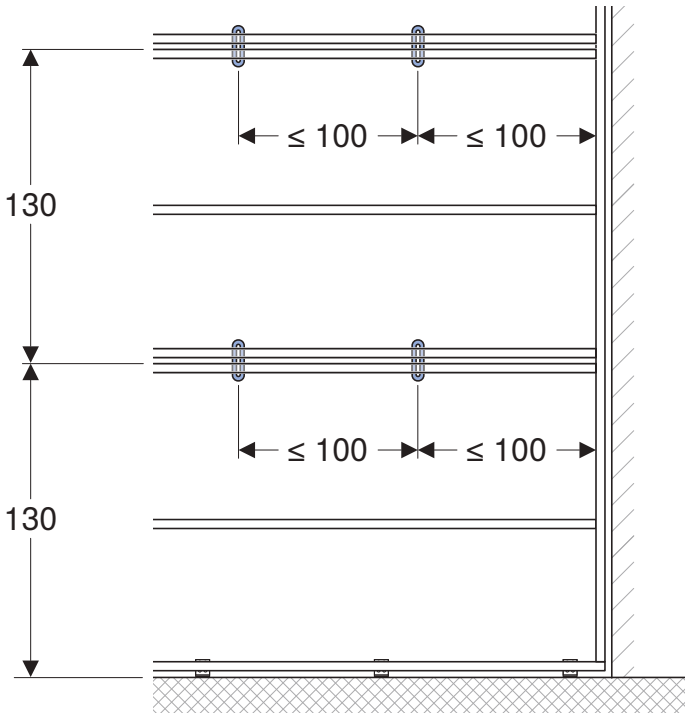
≤ 100
≤ 100
130
≤ 100
≤ 100
130



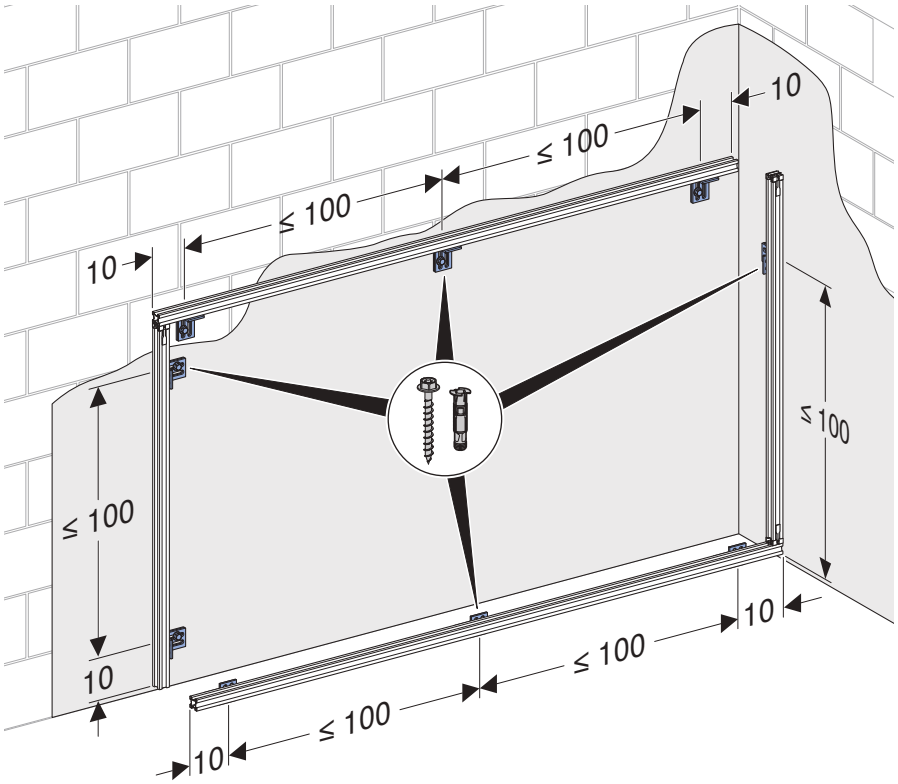


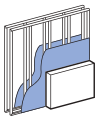

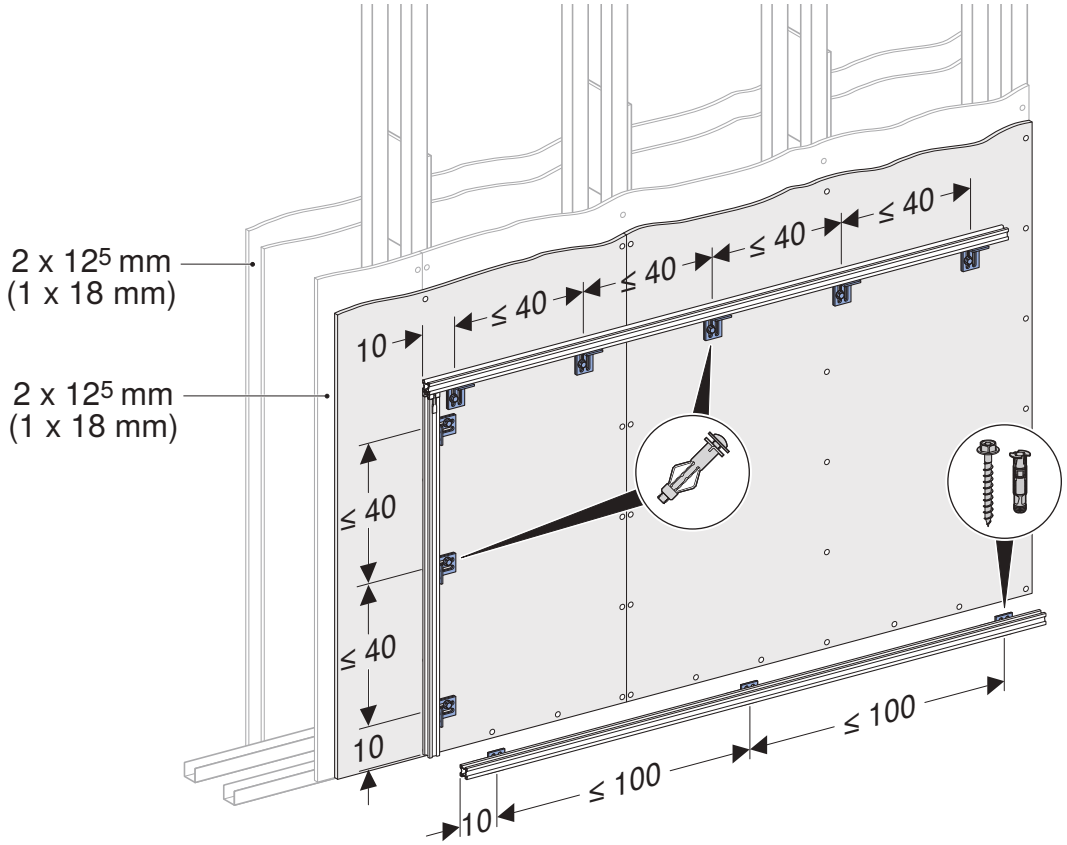



36028805360494219 © 05-2025
964.124.00.0(07)

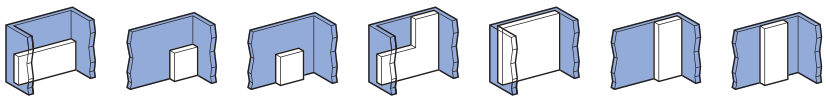

T≤ 45

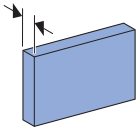

T= 13–24



T= 10–31

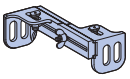

T= 31–45

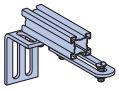

T= 31–45

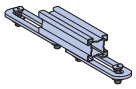

T = 16$^{5}$–45

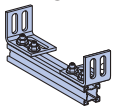

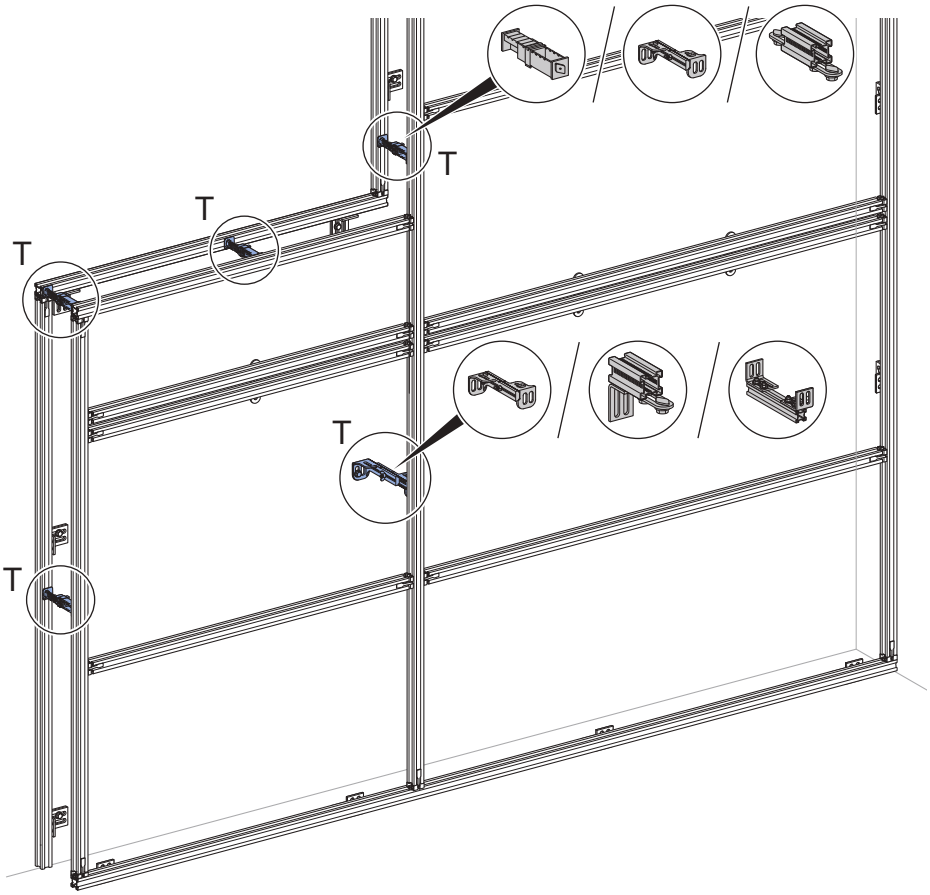


T= 45–70

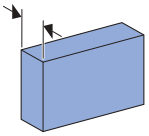

T= 45–70

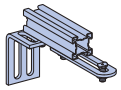

T= 45–70

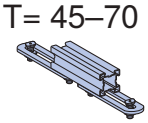

T= 45–70

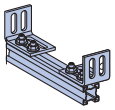

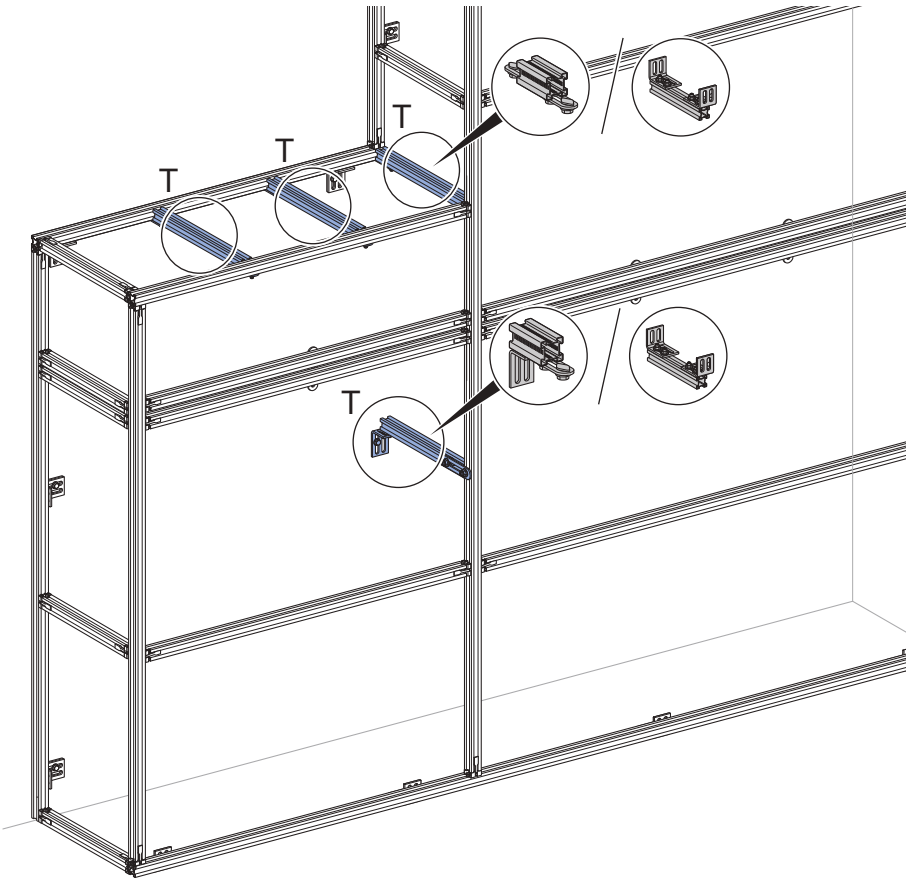

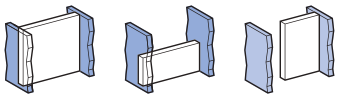

T≤ 45

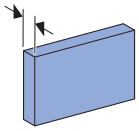

T= 13–24



T= 10⁵–36

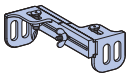

T= 31–45

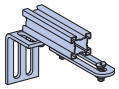

T= 31–45

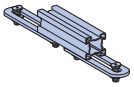

T = 16⁵–45

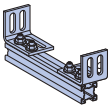

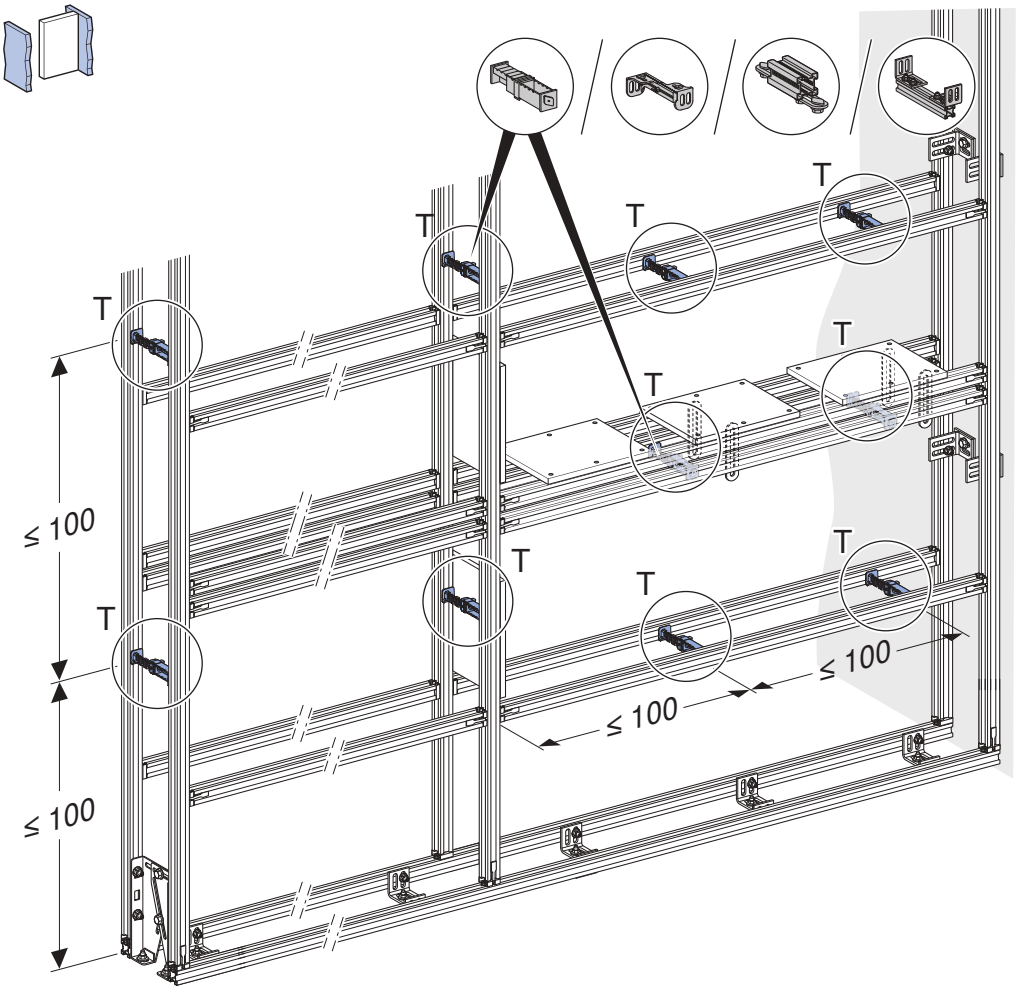


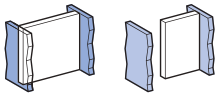

T= 45–70

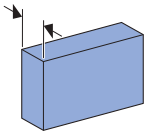

T= 45–70

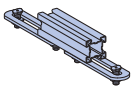

T= 45–70

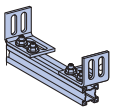

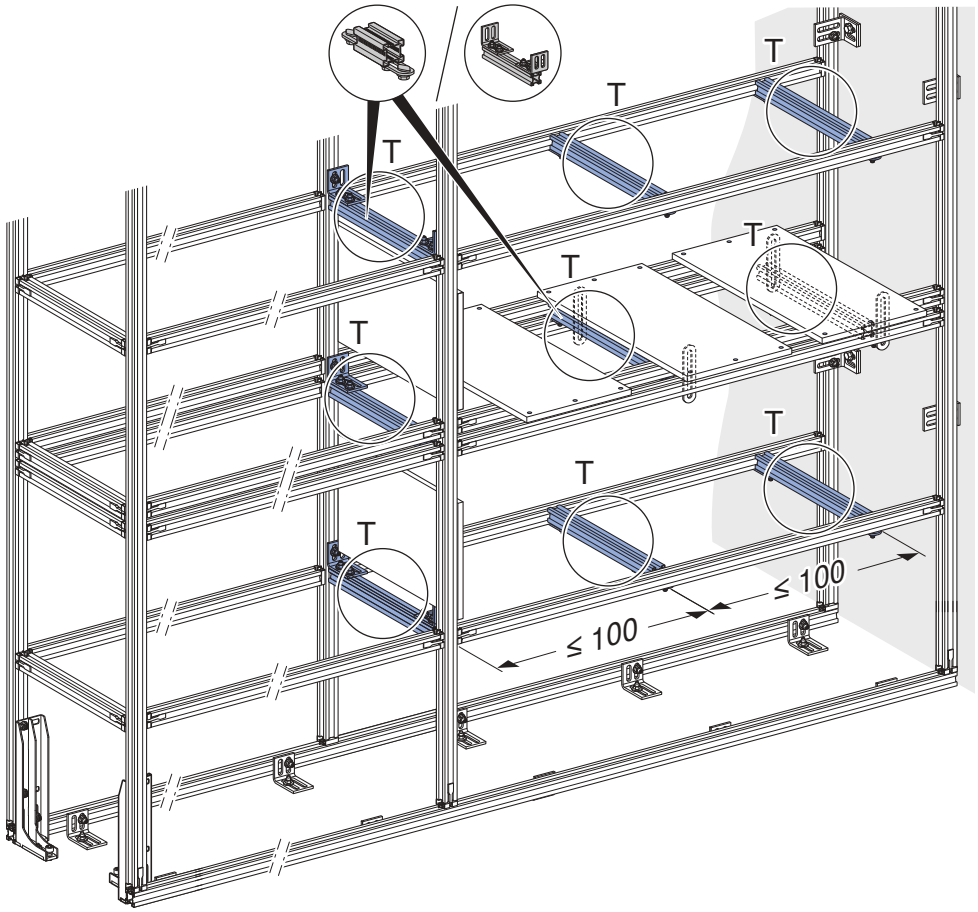




36028805360494219 © 05-2025
964.124.00.0(07)

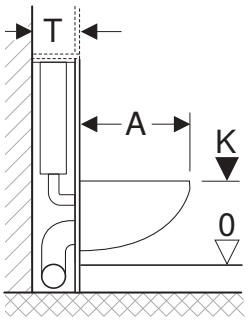


| | $T_1$ | $T_2$ | $T_3$ | $T_4$ | V |
|---|---|---|---|---|---|
|  | $16^{5}$–24 | $24^{5}$–36 | $36^{5}$–70 | $16^{5}$–70 | – |
| 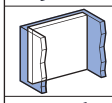 | $16^{5}$–24 | $18^{5}$–31 | $31^{5}$–70 | $16^{5}$–70 | – |
|  | $21^{5}$–24 | $24^{5}$–36 | $36^{5}$–70 | $21^{5}$–70 | ✓ |
|  | $21^{5}$–24 | $24^{5}$–36 | $36^{5}$–45 | $21^{5}$–45 | ✓ |

| | A ≤ 62<br>K = $41^{+2}_{-1}$ | A ≤ 62<br>K = 44–52 | A ≤ 70<br>K = 44–52 |
|---|---|---|---|
| 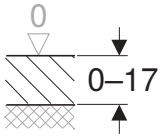 | 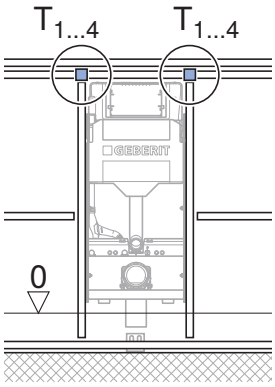 | 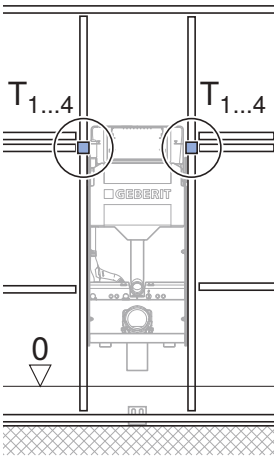 | 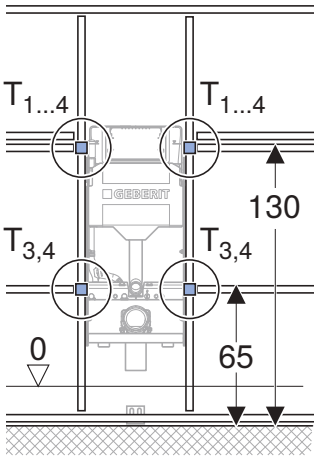 |
| 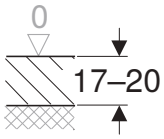 | 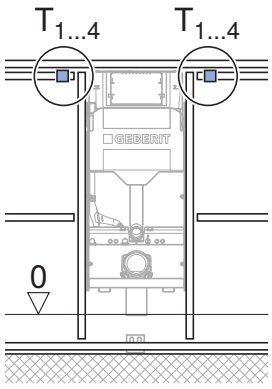 | | |
| 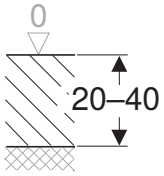 | 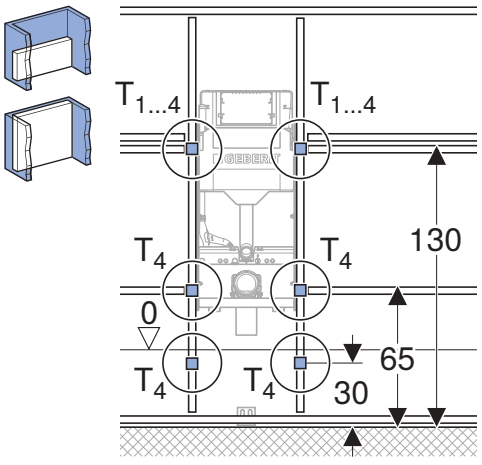 | 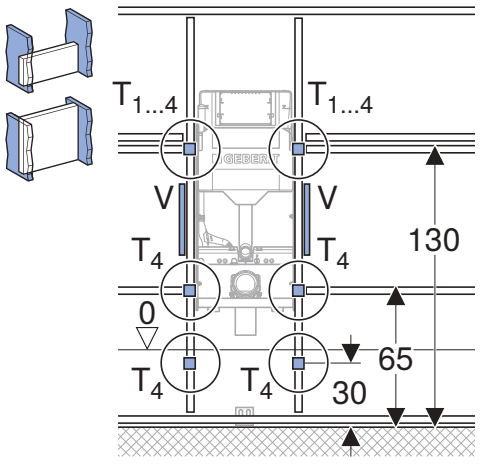 | |

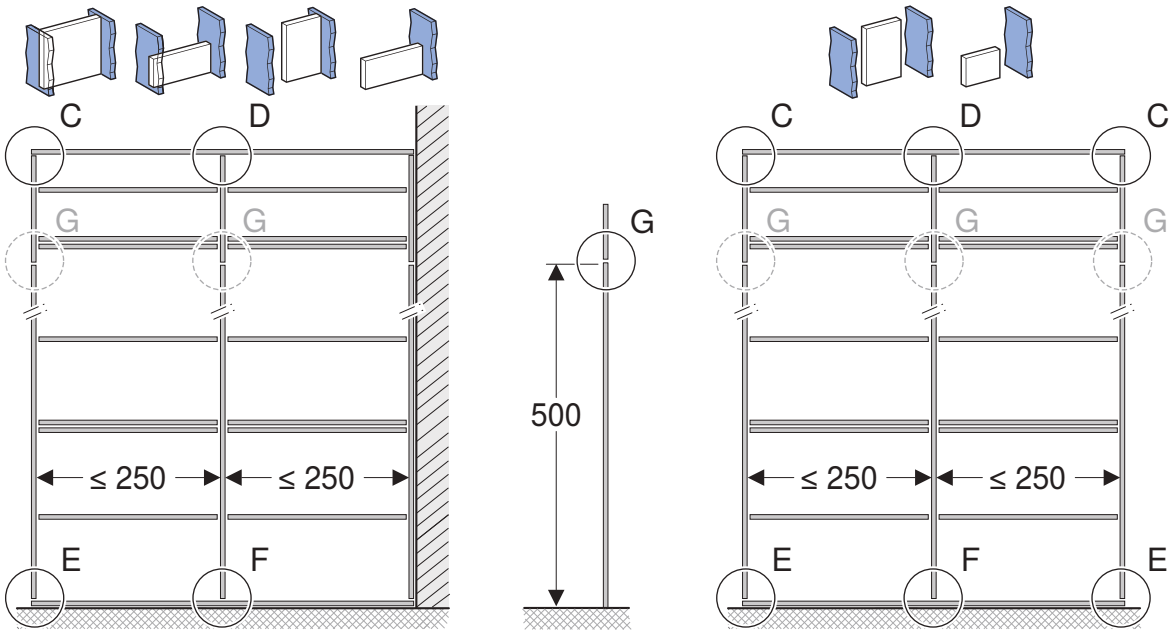


| | T, H, B | C | D | E | F | G<br>H > 500 | |
|---|---|---|---|---|---|---|---|
| 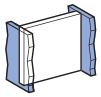 | H ≤ 360<br>B = ∞<br>T ≤ 70 | – | – | – | – | – | 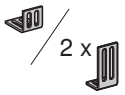 2 x |
| | H ≤ 600<br>B = ∞<br>T ≤ 45 | – | – | – | 2 x  | 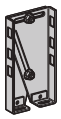 | 2 x  |
|  | H ≤ 360<br>B ≤ 250<br>T ≤ 45 | – | – | – | – | – | 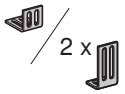 2 x |
| | H ≤ 600<br>B ≤ 500<br>T ≤ 44 | – | 2 x 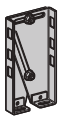 | – | 2 x  | 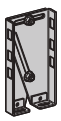 | 2 x  |
| 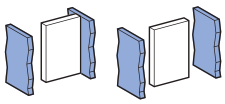 | H ≤ 360<br>B ≤ 250<br>T ≤ 44 | – | – |  | – | – | 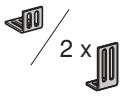 2 x |
| | H ≤ 600<br>B ≤ 500<br>T ≤ 44 | – | – | 2 x  | 2 x 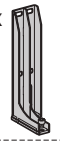 |  | 2 x  |
| 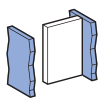 | H ≤ 360<br>B ≤ 250<br>T ≤ 60 | – | – | 2 x  | – | – | 2 x  |
| 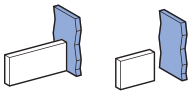 | H ≤ 220<br>B ≤ 500<br>T ≤ 44 | 2 x  | 2 x 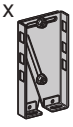 | 2 x  | 2 x 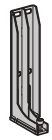 | – | 2 x  |


360288053604942l9 © 05-2025
964.124.00.0(07)

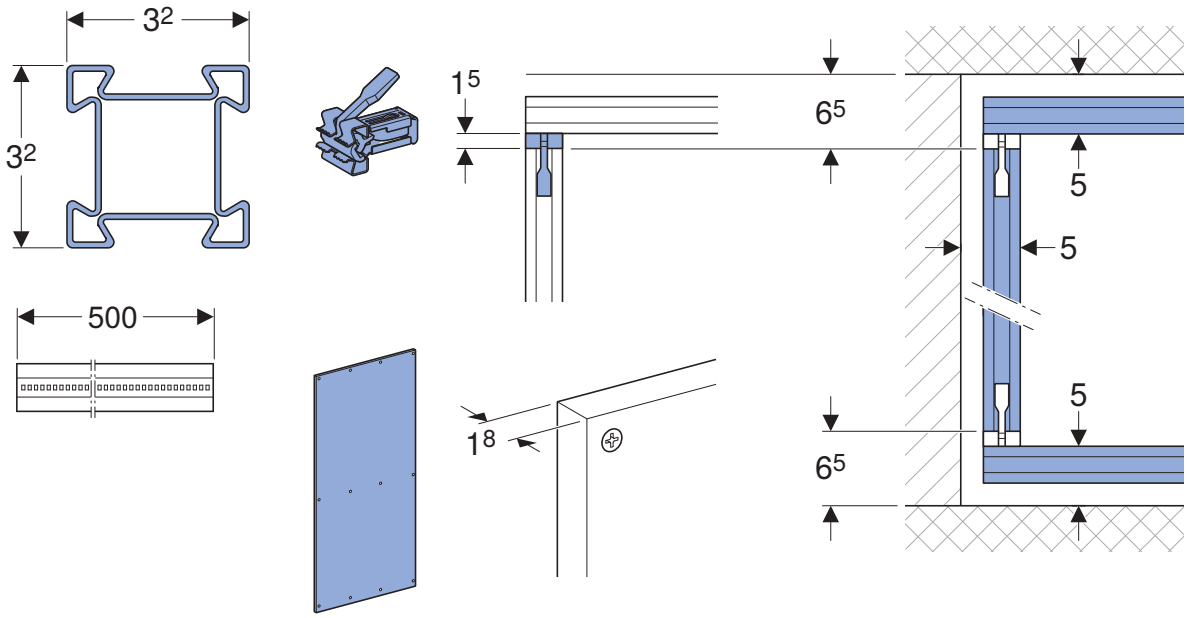
32
32
500
15
65
5
5
5
65
18

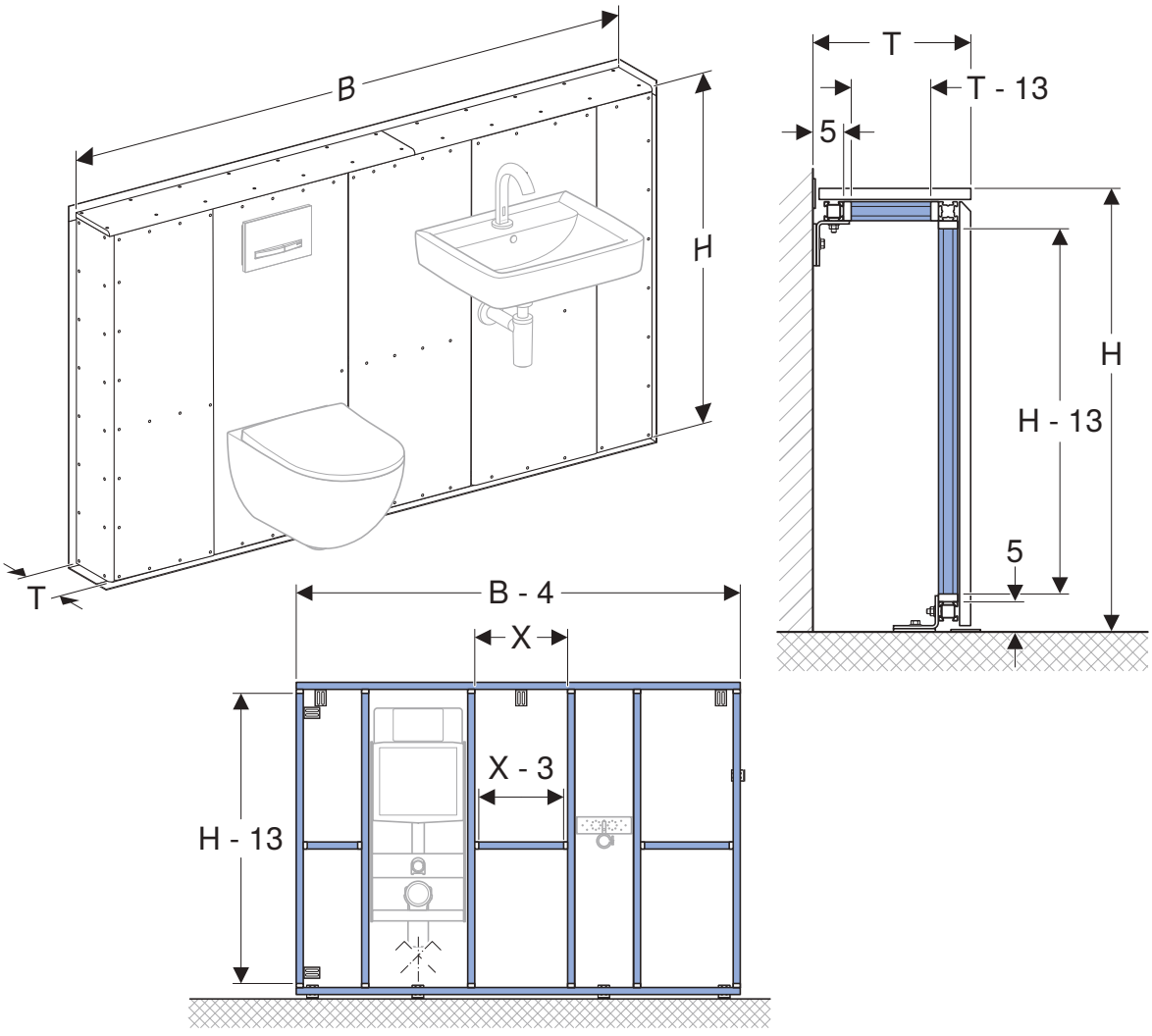
B
H
T
T
T - 13
5
H
H - 13
5
B - 4
X
X - 3
H - 13

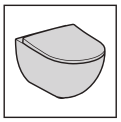

RH

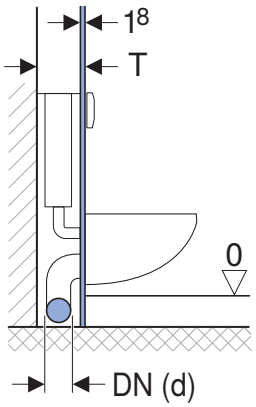


TH

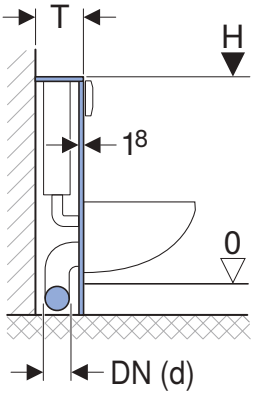


| [cm] | DN 50 (d 63) 56/63 | T DN 80 (d 90) 75/90 | T DN 100 (d 110) 110 | H |
|---|---|---|---|---|
| | - | 16[5] | 19[5] | ≥ 114 |
| Omega | - | RH 16[5] / TH ← 18[5] ↓ 22 | RH 19[5] / TH ← 19[5] ↓ 22 | ↓ 87–104 ← ≥ 87 |
| | 13 | 16 | 18 | ≥ 87 |
| | 13 | 16 | 18 | ≥ 114 / ≥ 142 |

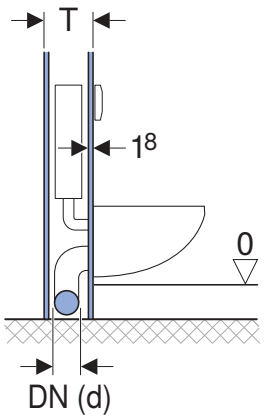


| [cm] | DN 50 (d 63) 56/63 | T DN 80 (d 90) 75/90 | T DN 100 (d 110) 110 | 2 x DN 80 (d 90) 75/90 | 2 x DN 100 (d 110) 110 |
|---|---|---|---|---|---|
| | | 21[5] | 24[5] | 25 | 27 |
| Omega | | 23[5] | 24[5] | 25 | 27 |
| | 18 | 21 | 23 | 25 | 27 |
| | 18 | 21 | 23 | 25 | 27 |

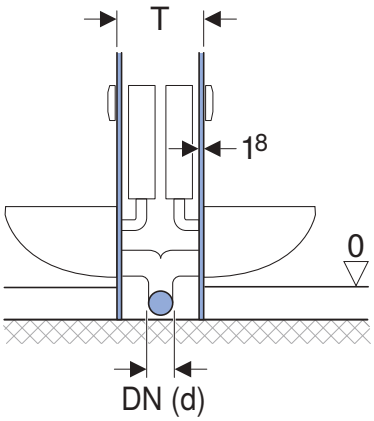


| [cm] | DN 50 (d 63) 56/63 | T DN 80 (d 90) 75/90 | T DN 100 (d 110) 110 | 2 x DN 80 (d 90) 75/90 | 2 x DN 100 (d 110) 110 |
|---|---|---|---|---|---|
| | | 29 | 31 | 29 | 31 |
| Omega | | 29 | 31 | 29 | 31 |
| | | 24 | 24 | 25 | 27 |
| Omega | | 26 | 26 | 26 | 27 |
| | 18 | 21 | 22 | 25 | 27 |
| | 18 | 21 | 22 | 25 | 27 |


360288053604942l9 © 05-2025
964.124.00.0(07)

# 1

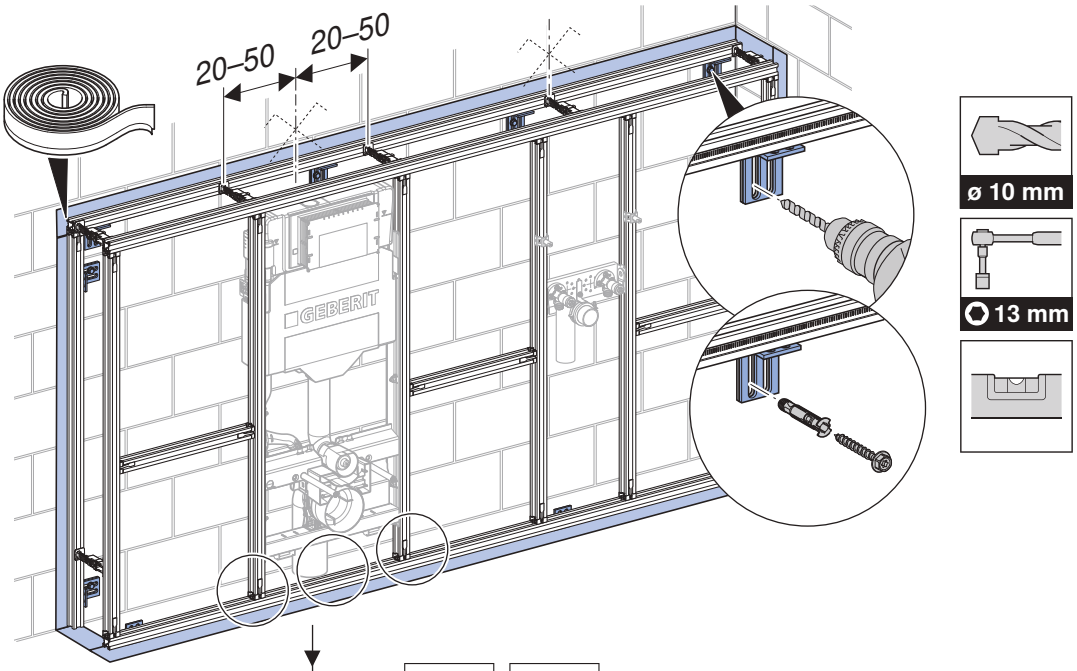


A / B / C / D

A

$7^5$ x $5^5$

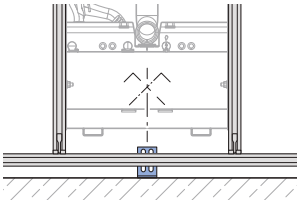

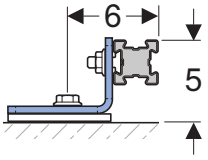


B

12 x $5^5$

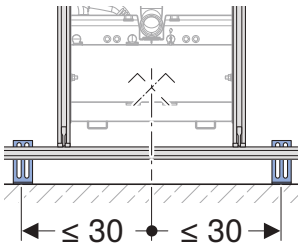


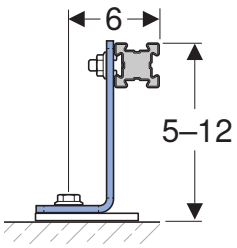


C

13 x 13

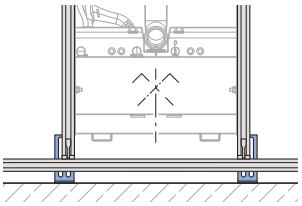

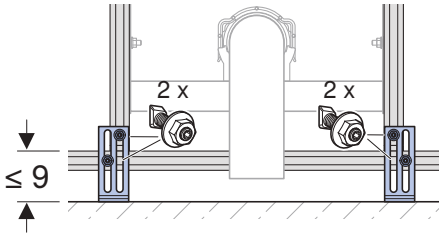


D

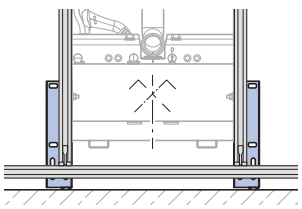

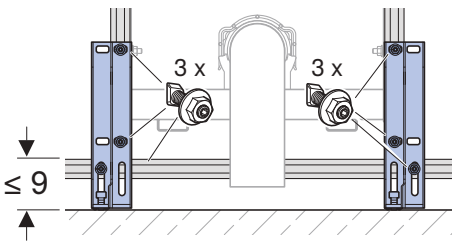

# 2

✓

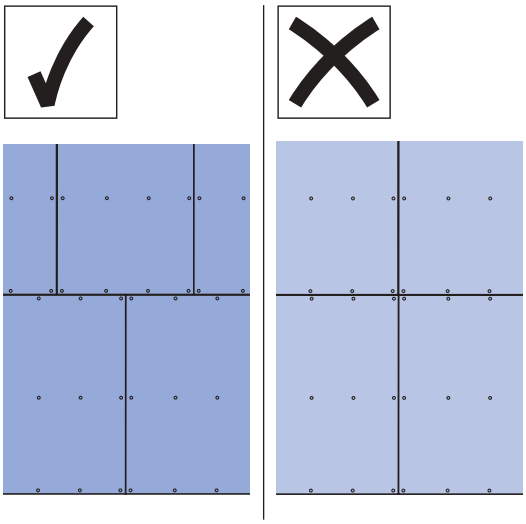

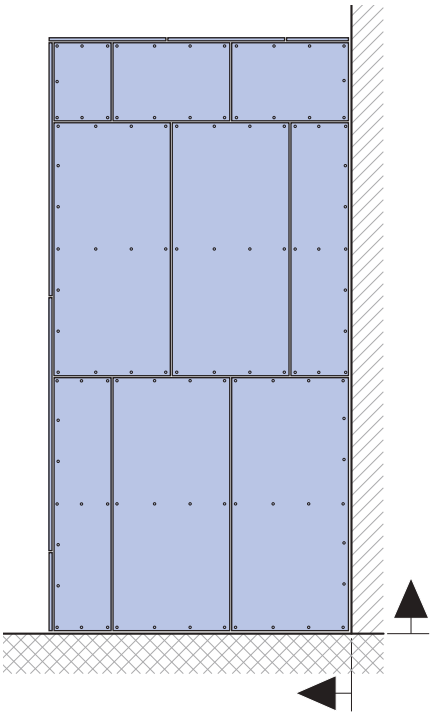

## 1

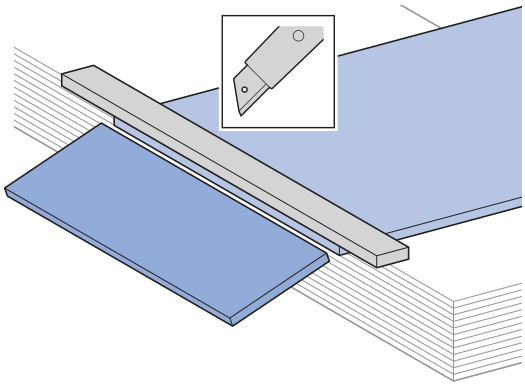

## 2

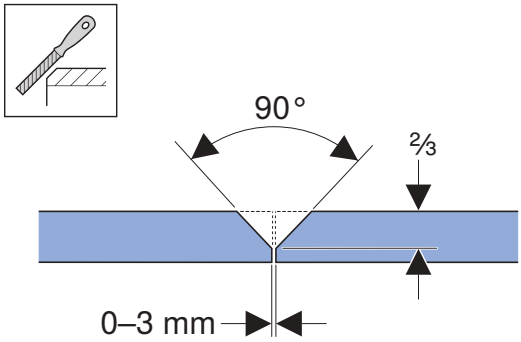


## 3

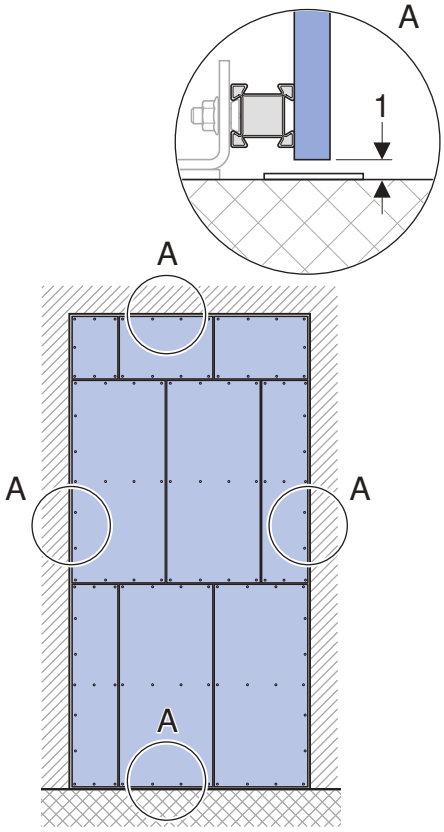



36028805360494219 © 05-2025
964.124.00.0(07)

## 4

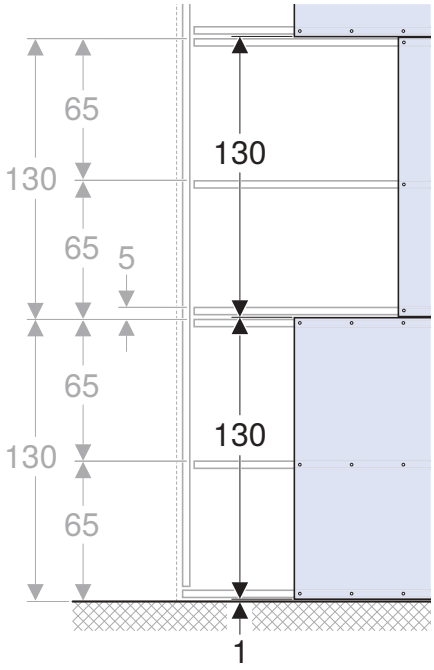


## 5

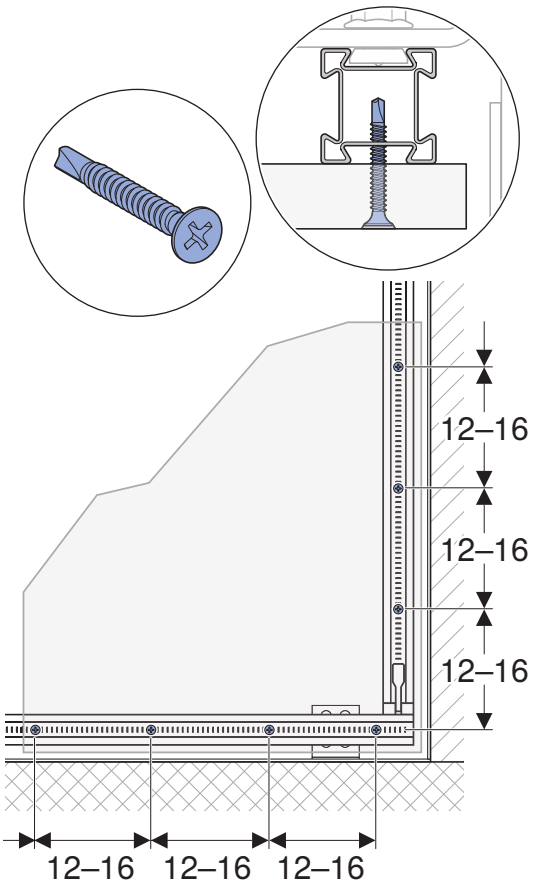


## 6

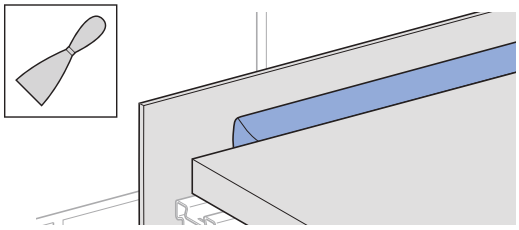

## 7

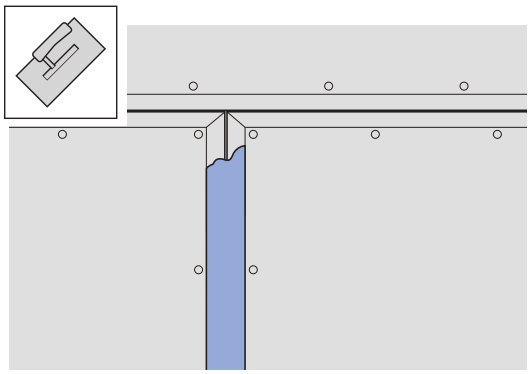

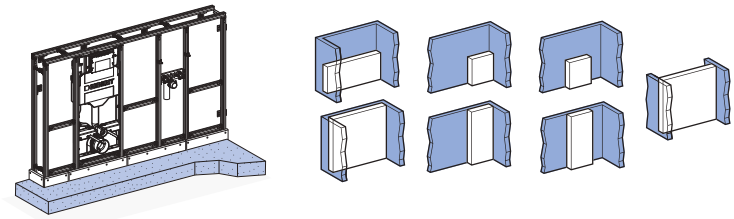

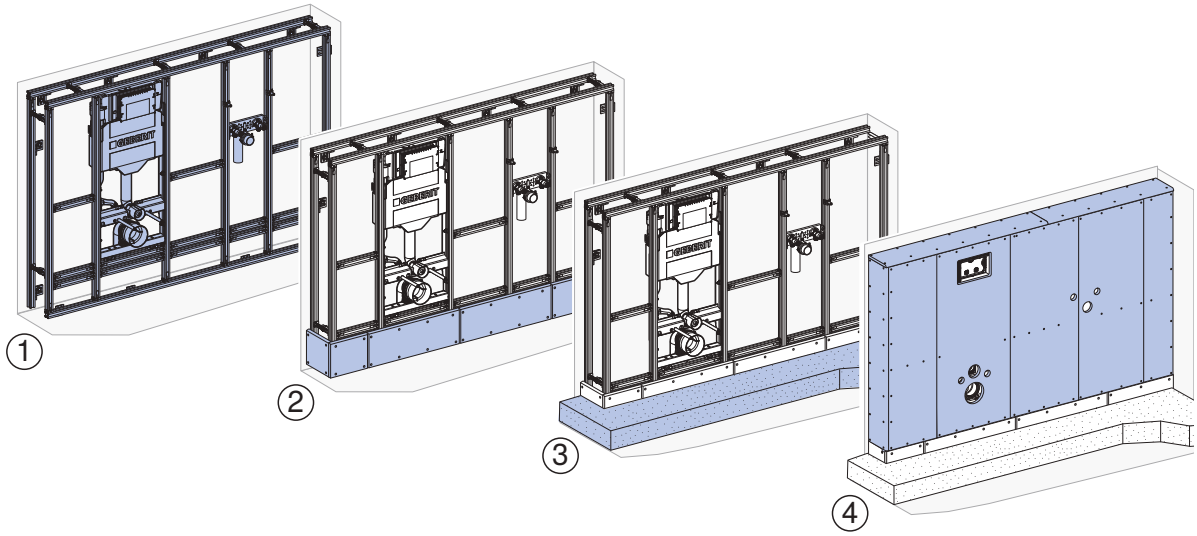


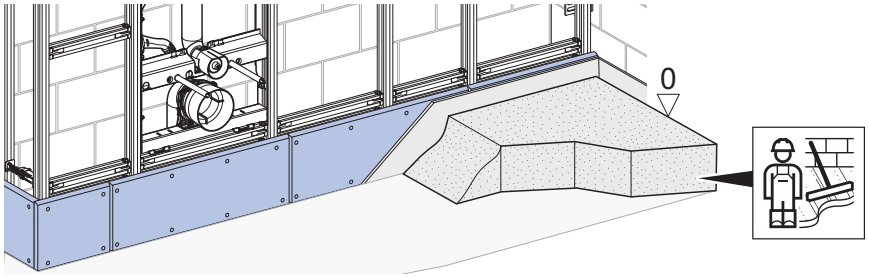


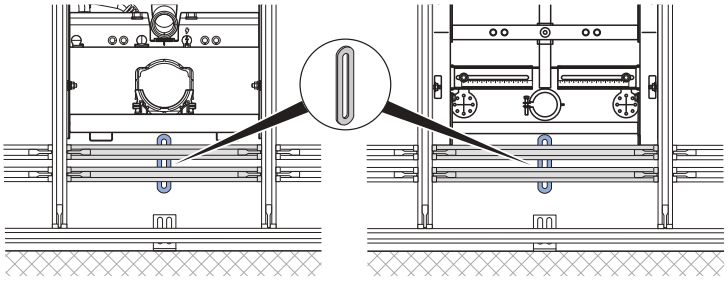

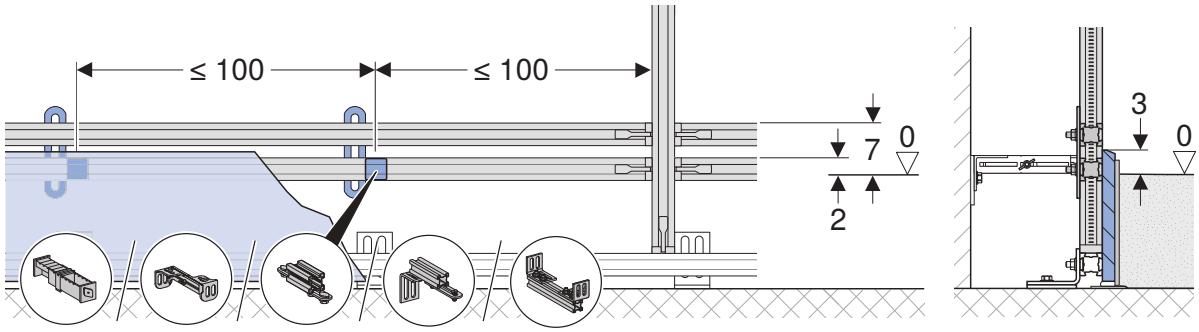



36028805360494219 © 05-2025

# 3

## 1

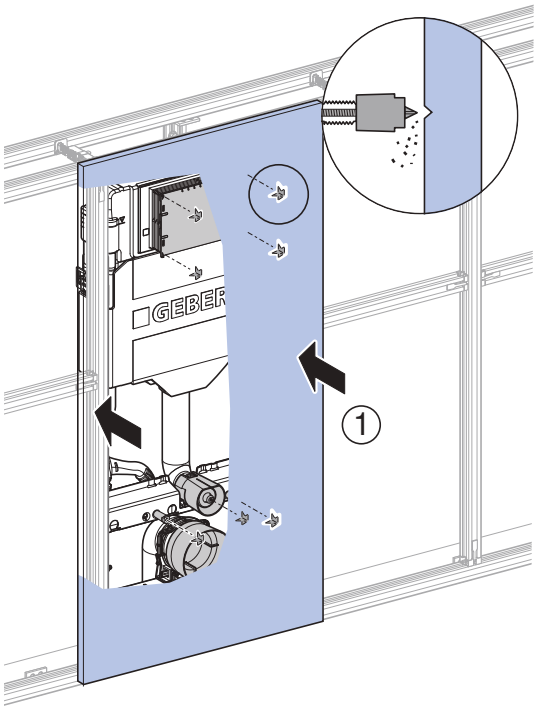
GEBERIT
1

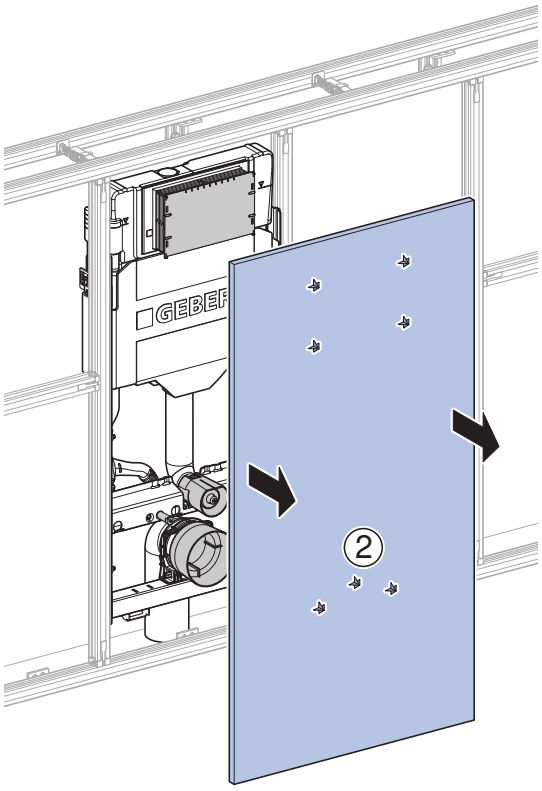
GEBERIT
2

## 2

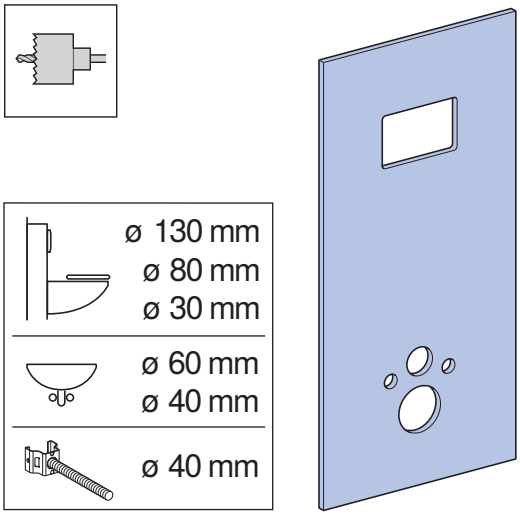
ø 130 mm
ø 80 mm
ø 30 mm
ø 60 mm
ø 40 mm
ø 40 mm

## 3

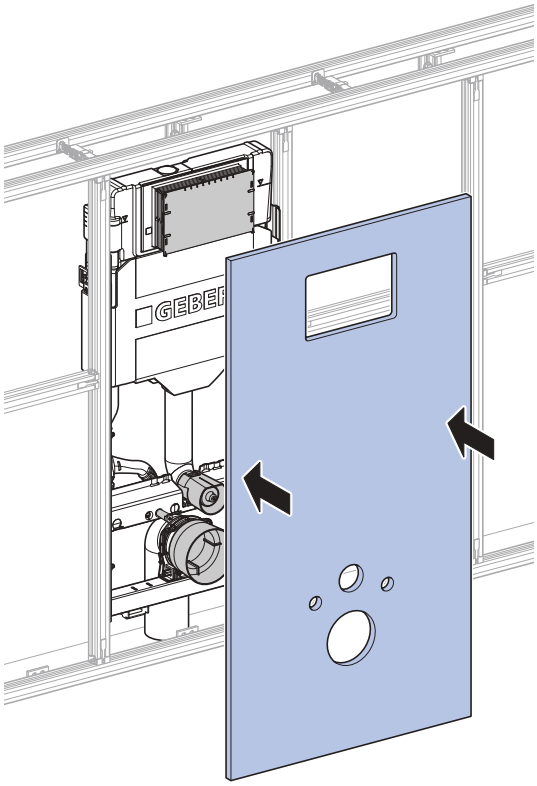
GEBERIT

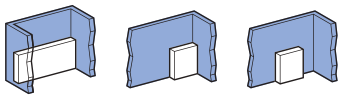

| H | B | T | |
|---|---|---|---|
| ≤ 500 | ∞ | ≤ 45 | ✓ |
| ≤ 500 | ∞ | ≤ 70 | |
| ≤ 600 | ∞ | ≤ 45 | |

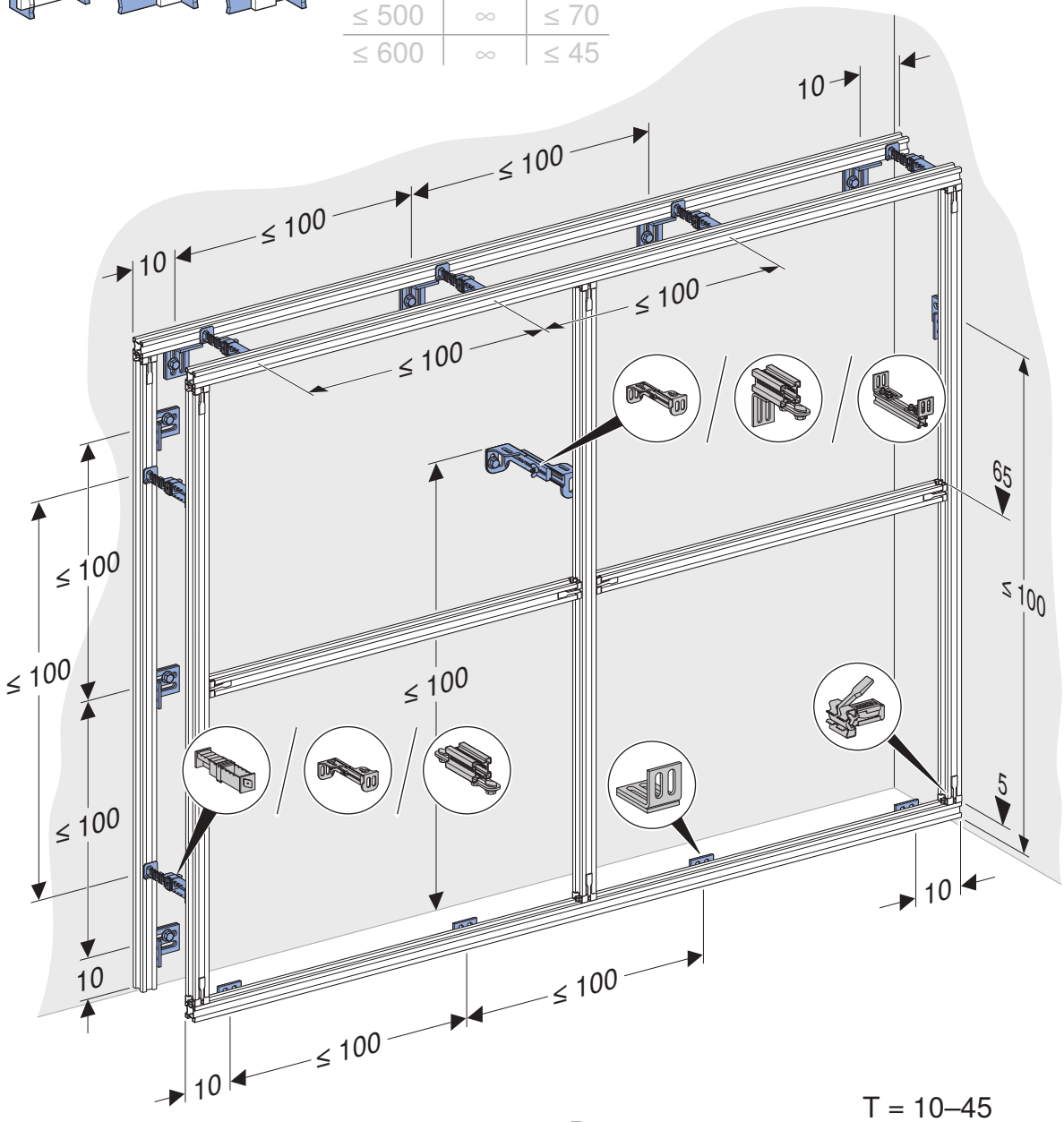


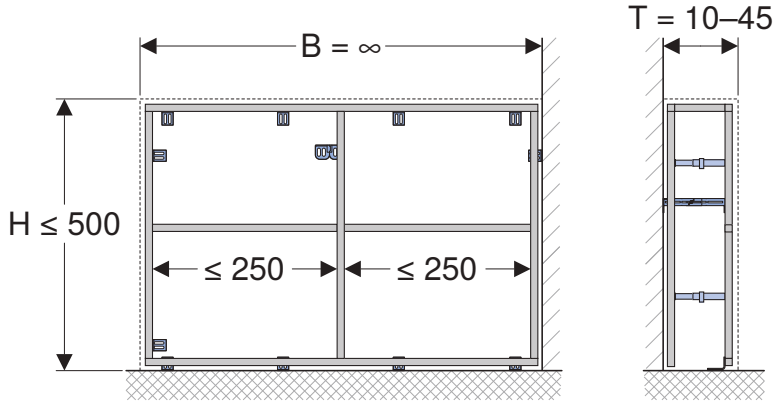




36028805360494219 © 05-2025
964.124.00.0(07)

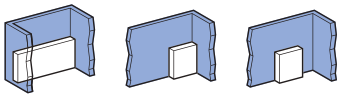

| H | B | T | |
|---|---|---|---|
| ≤ 500 | ∞ | ≤ 45 | |
| ≤ 500 | ∞ | ≤ 70 | ✓ |
| ≤ 600 | ∞ | ≤ 45 | |

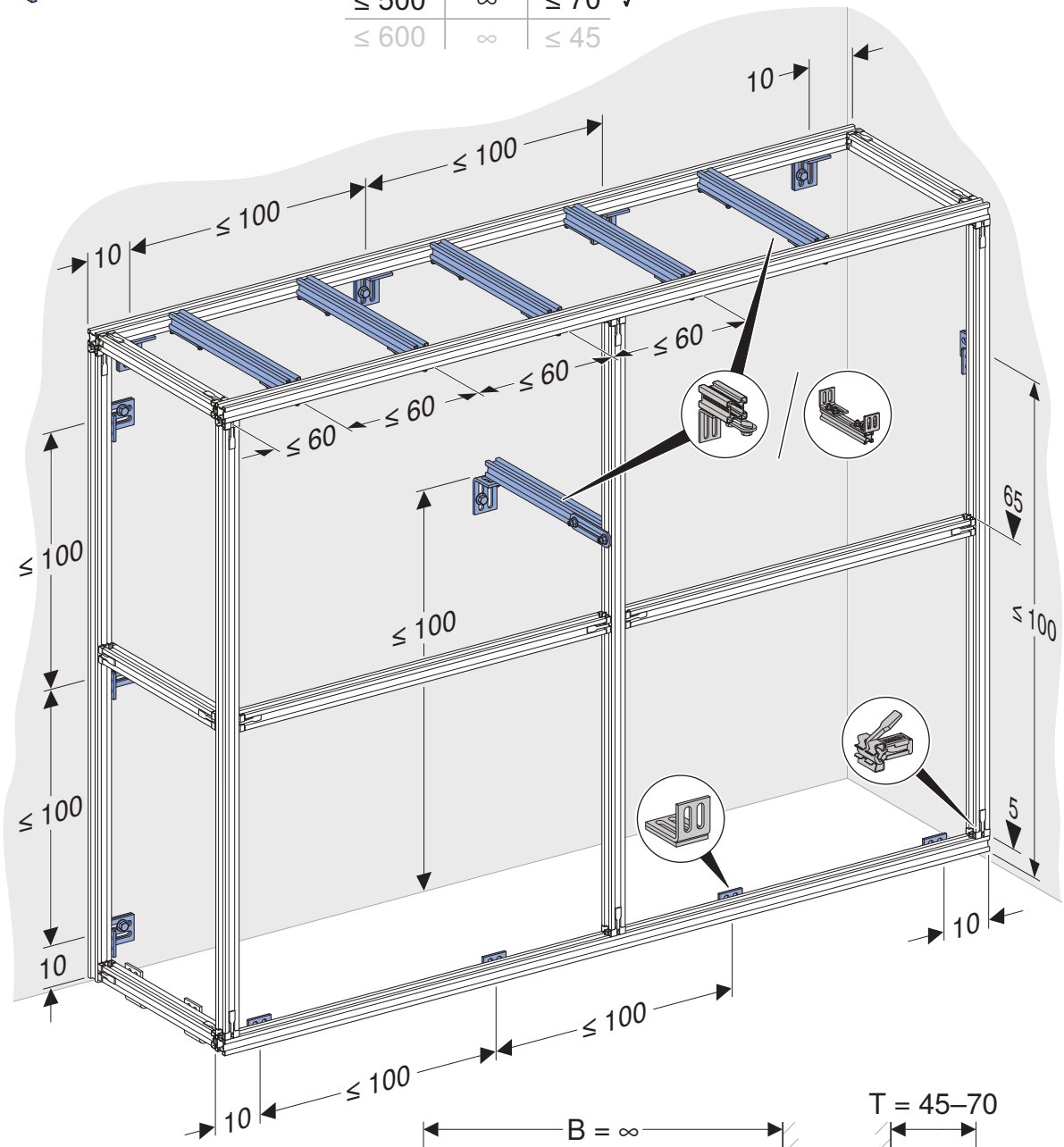


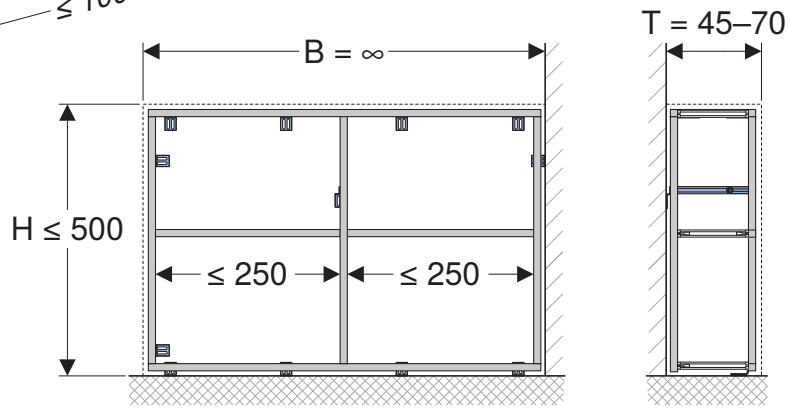

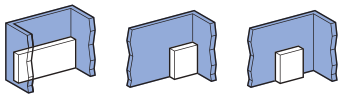

| H | B | T |
|---|---|---|
| ≤ 500 | ∞ | ≤ 45 |
| ≤ 500 | ∞ | ≤ 70 |
| ≤ 600 | ∞ | ≤ 45 ✓ |

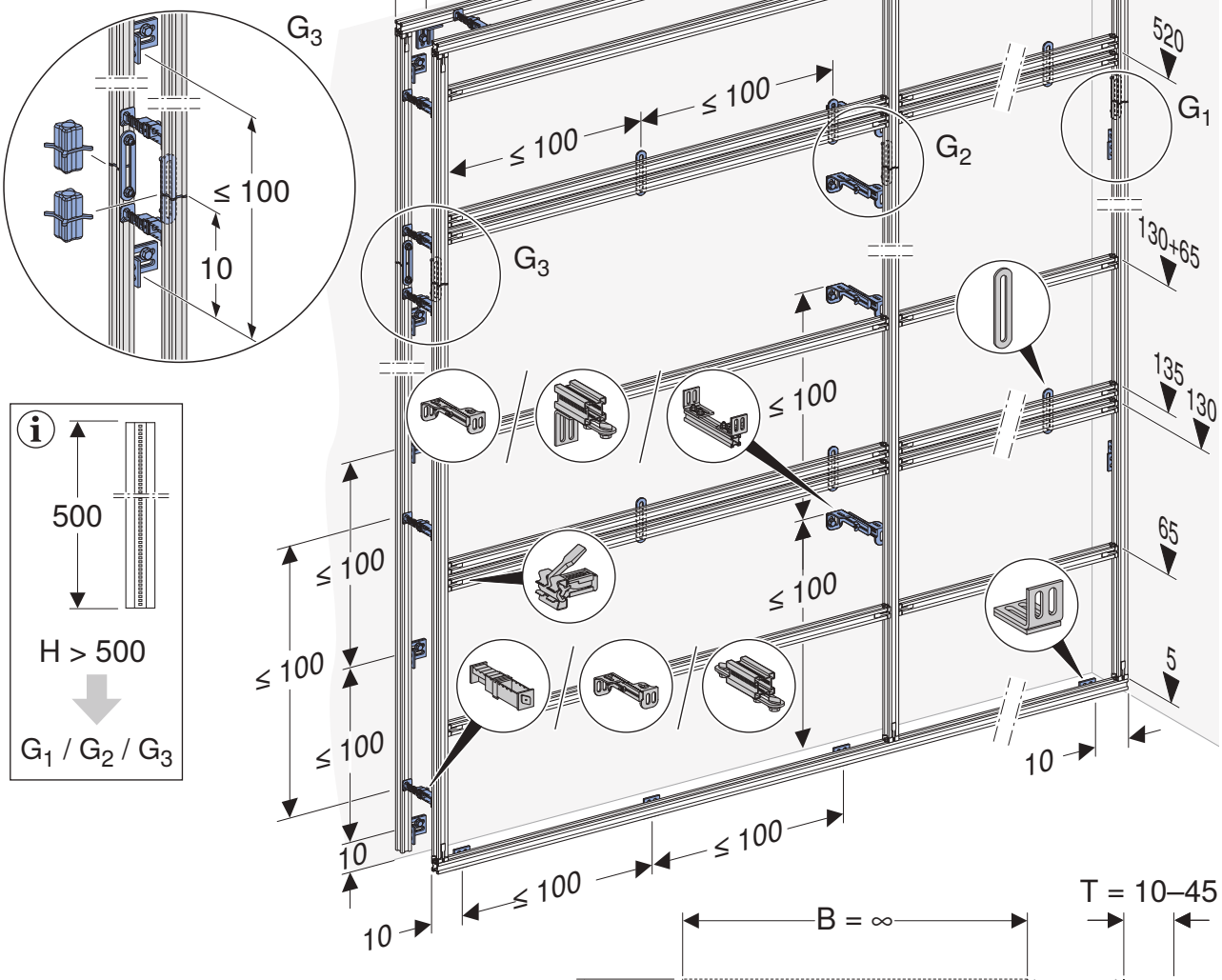


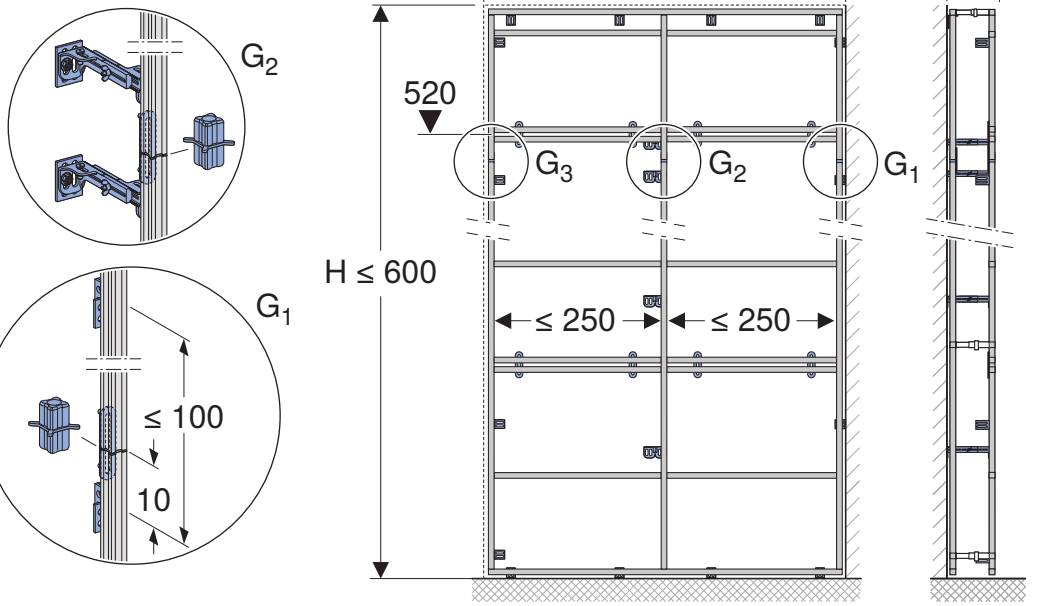



36028805360494219 © 05-2025
964.124.00.0(07)

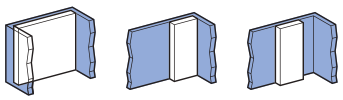

| H | B | T | |
|---|---|---|---|
| ≤ 500 | ∞ | ≤ 45 | ✓ |
| ≤ 500 | ∞ | ≤ 70 | |
| ≤ 600 | ∞ | ≤ 45 | |

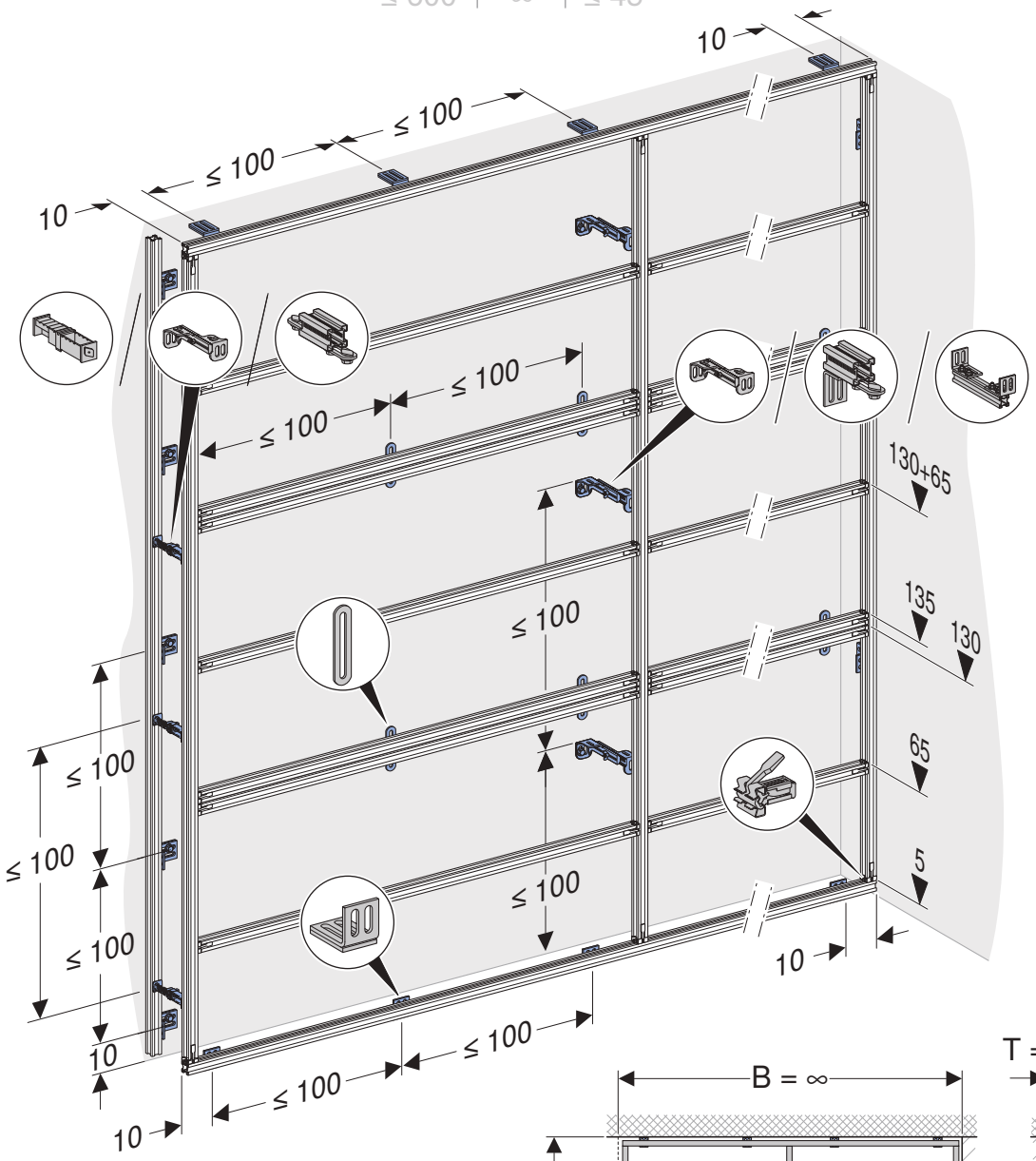


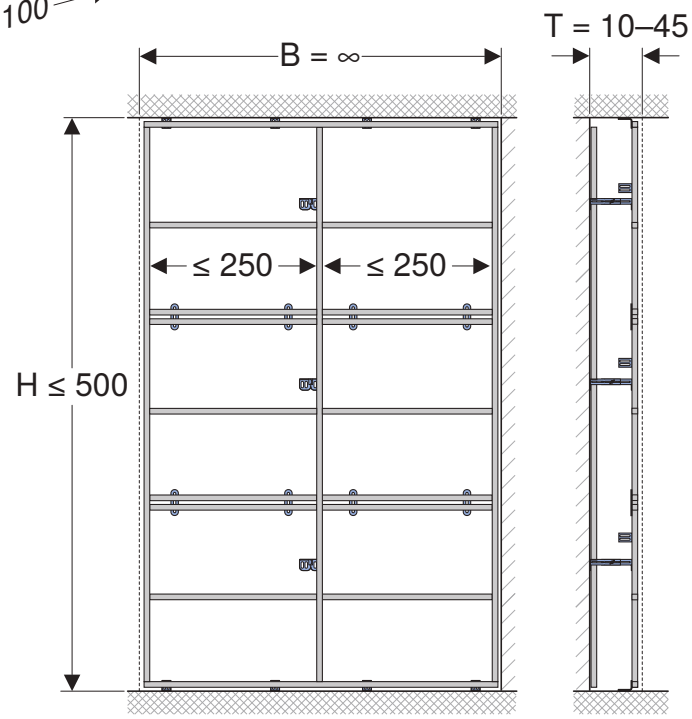

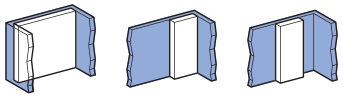

| H | B | T | |
|---|---|---|---|
| ≤ 500 | ∞ | ≤ 45 | |
| ≤ 500 | ∞ | ≤ 70 | ✓ |
| ≤ 600 | ∞ | ≤ 45 | |

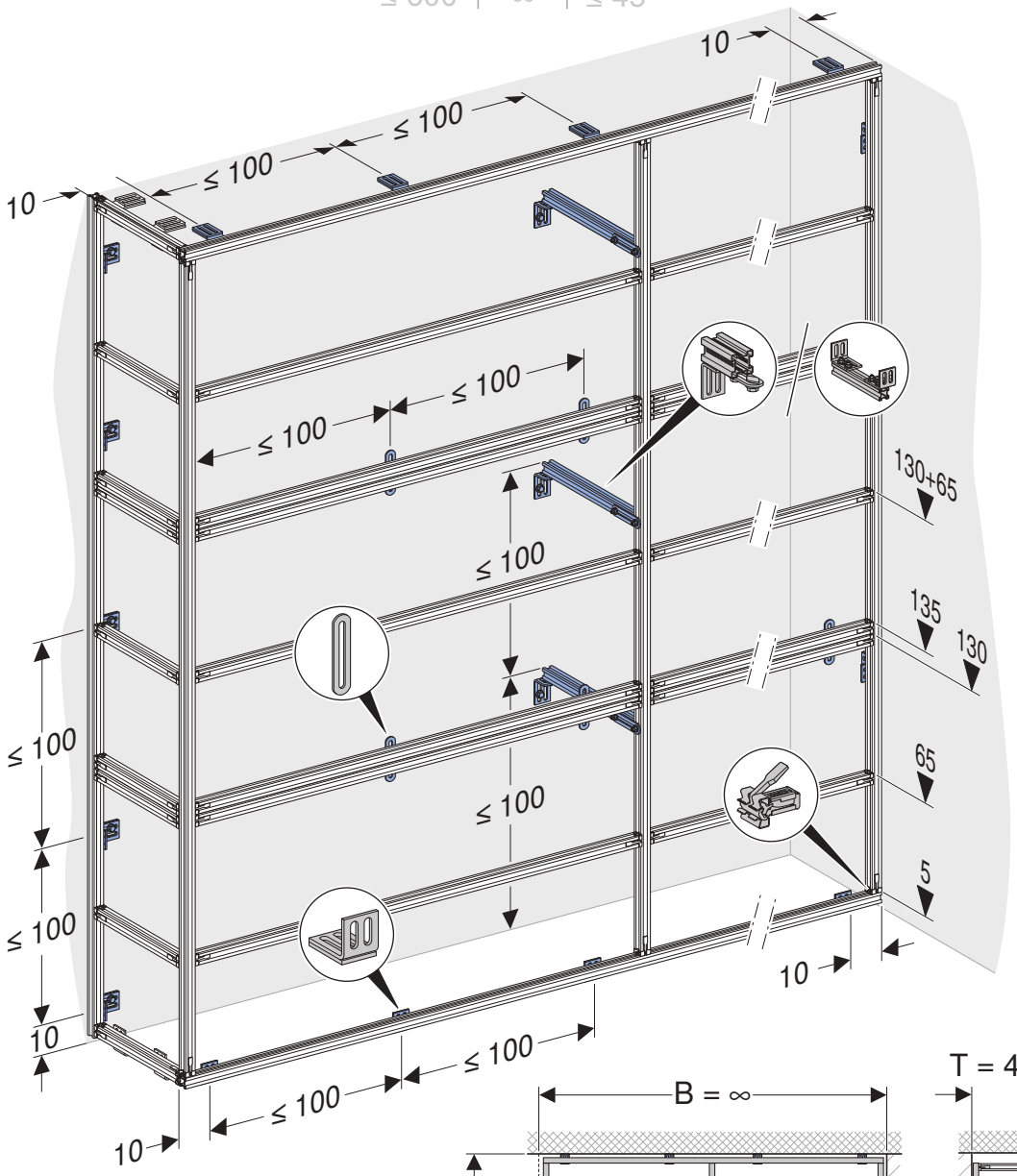


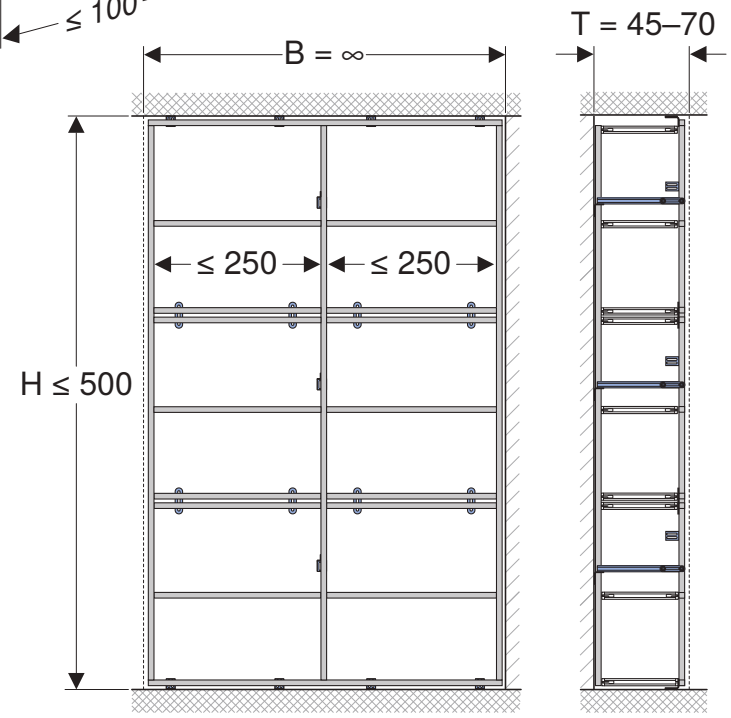



36028805360494219 © 05-2025
964.124.00.0(07)

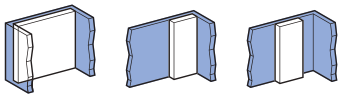

| H | B | T |
|---|---|---|
| ≤ 500 | ∞ | ≤ 45 |
| ≤ 500 | ∞ | ≤ 70 |
| ≤ 600 | ∞ | ≤ 45 ✓ |

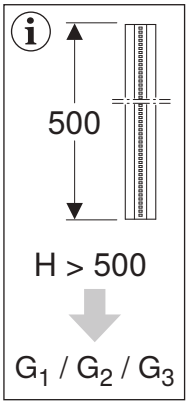


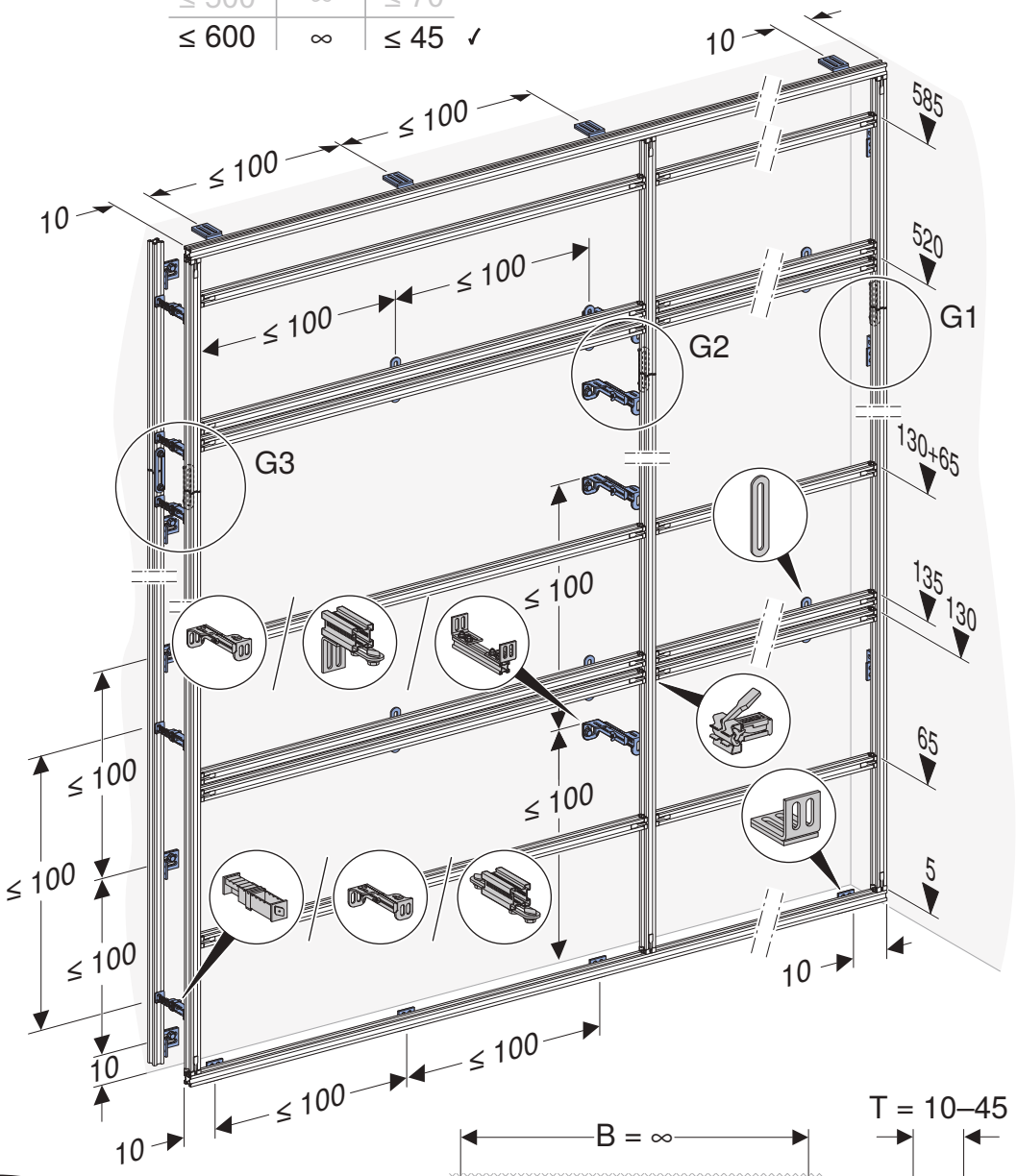


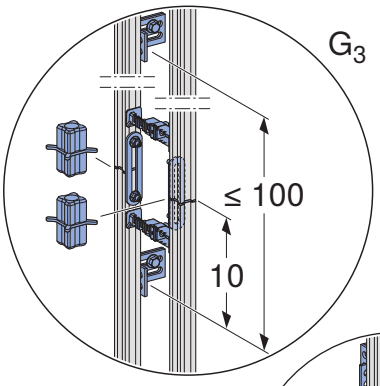


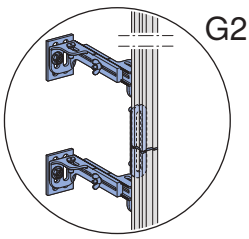


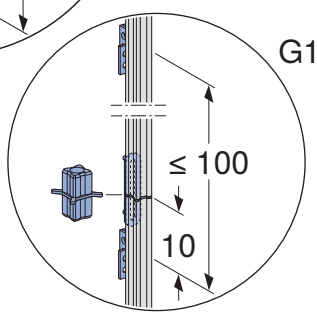


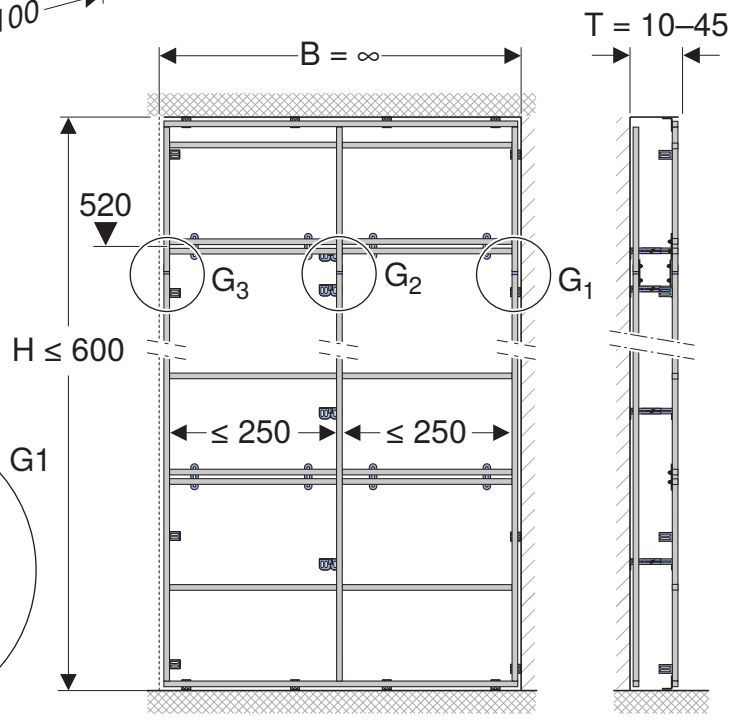

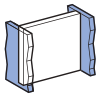

| H | B | T | |
|---|---|---|---|
| ≤ 360 | ∞ | ≤ 45 | ✓ |
| ≤ 450 | ≤ 360 | ≤ 45 | ✓ |
| ≤ 360 | ∞ | ≤ 70 | |
| ≤ 450 | ≤ 360 | ≤ 70 | |
| ≤ 600 | ∞ | ≤ 44 | |

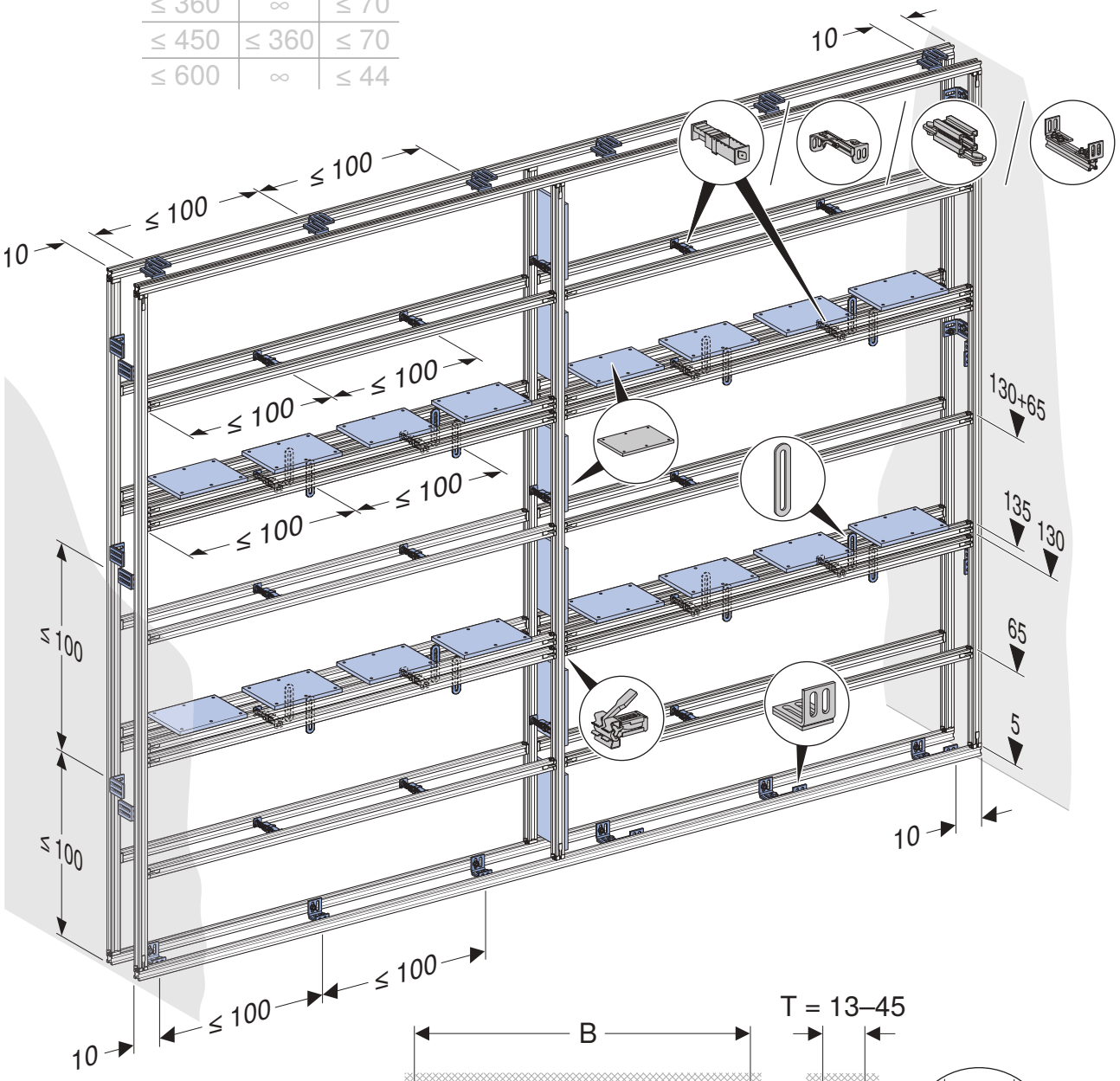


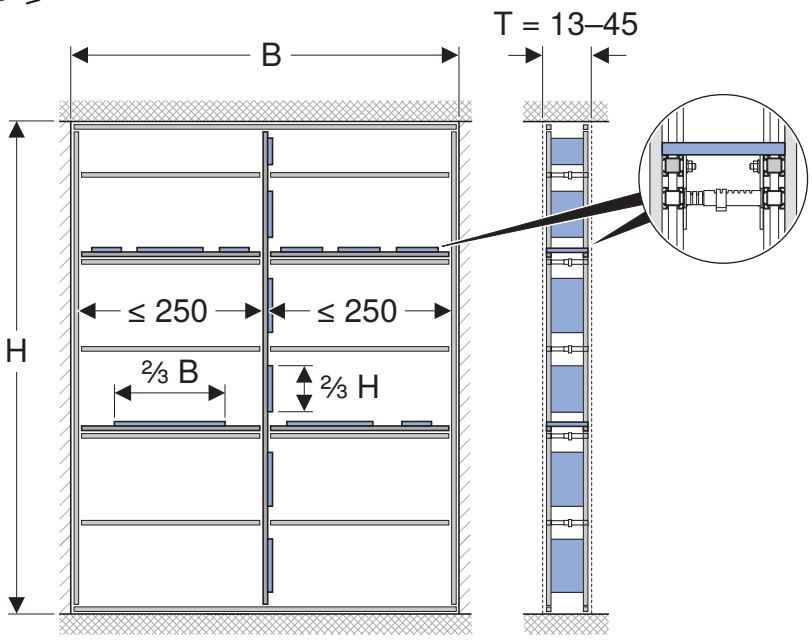



36028805360494219 © 05-2025
964.124.00.0(07)

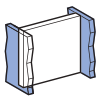

| H | B | T | |
|---|---|---|---|
| ≤ 360 | ∞ | ≤ 45 | |
| ≤ 450 | ≤ 360 | ≤ 45 | |
| ≤ 360 | ∞ | ≤ 70 | ✓ |
| ≤ 450 | ≤ 360 | ≤ 70 | ✓ |
| ≤ 600 | ∞ | ≤ 44 | |

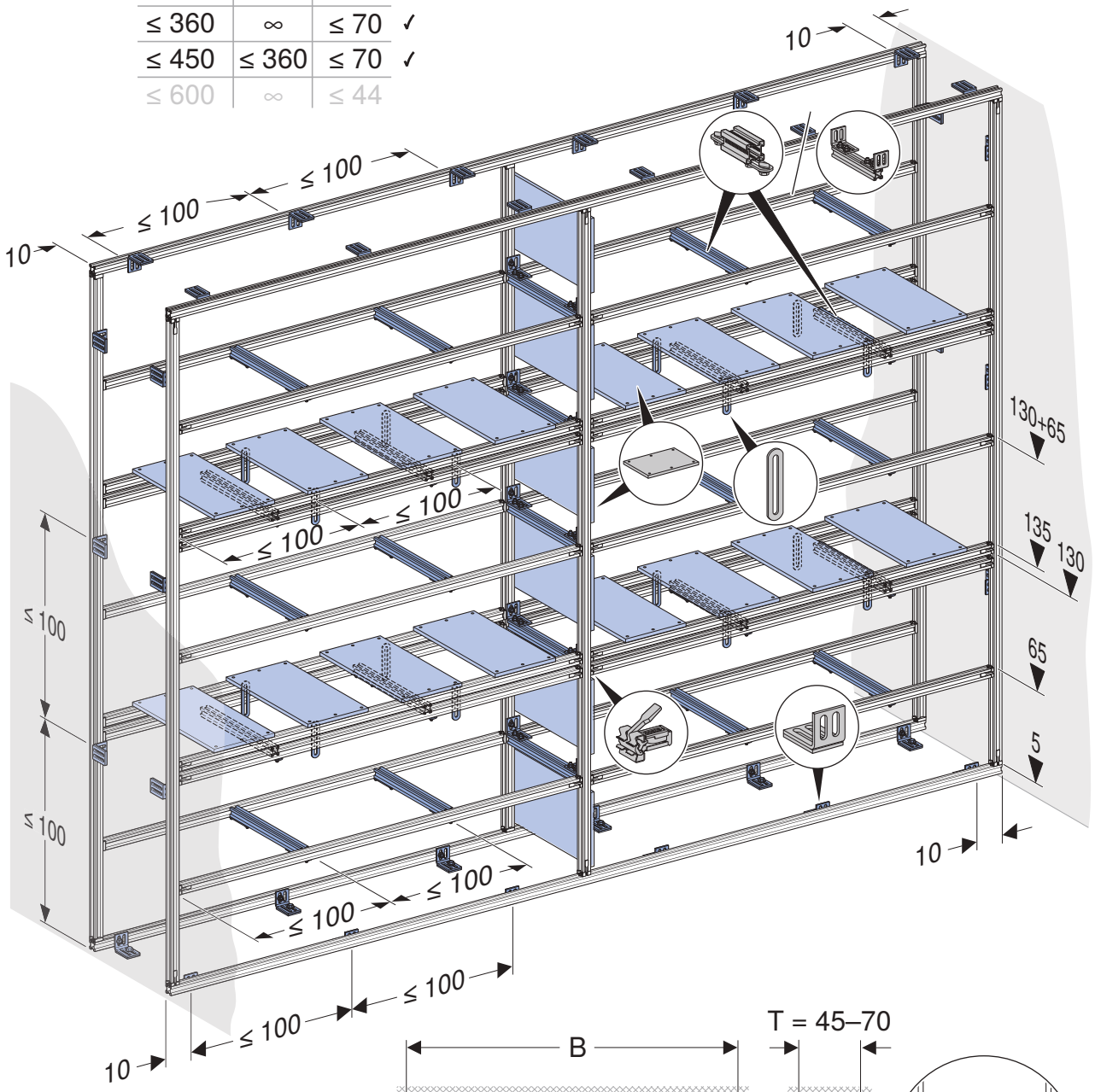


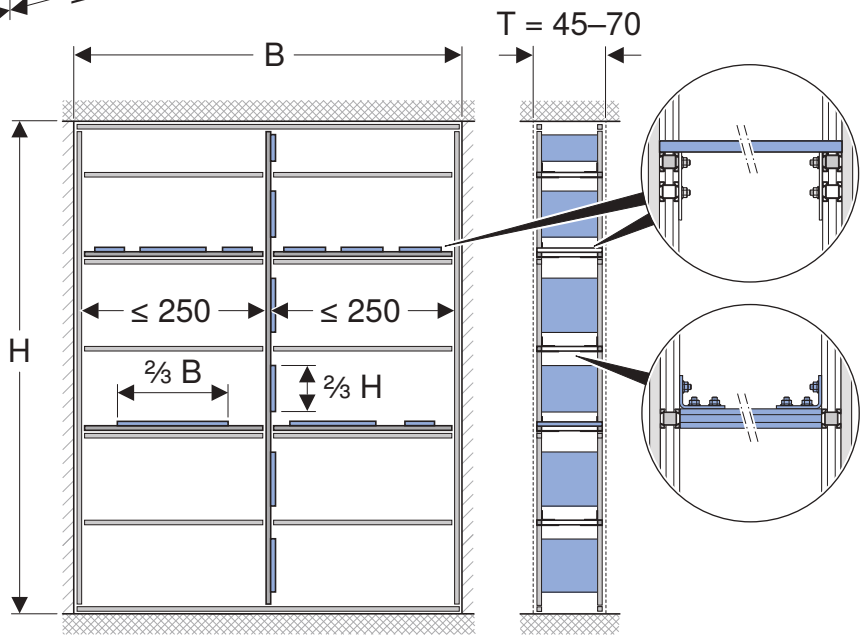

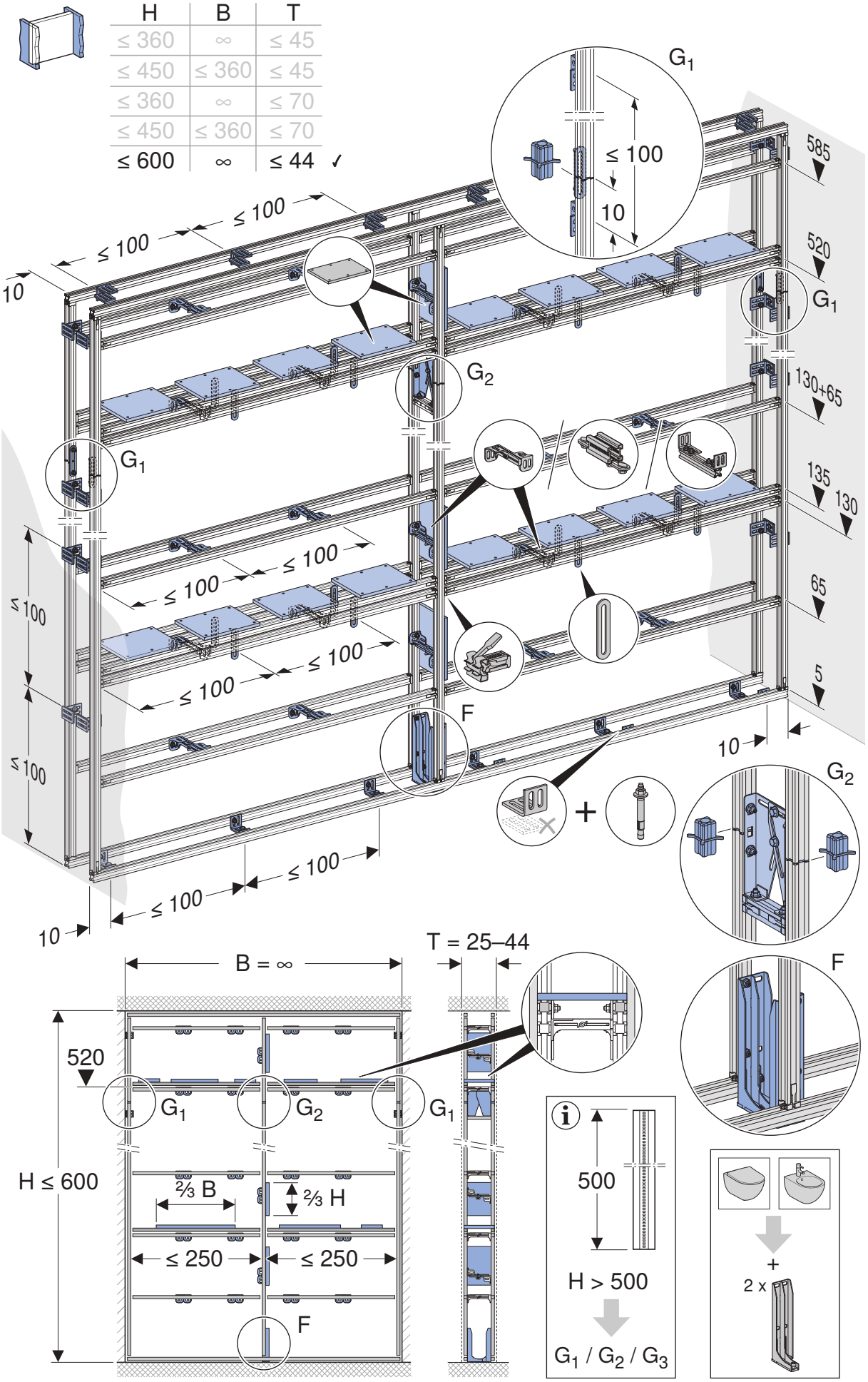



36028805360494219 © 05-2025
964.124.00.0(07)

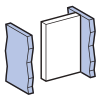

| H | B | T | |
|---|---|---|---|
| ≤ 360 | ≤ 250 | ≤ 44 | ✓ |
| ≤ 360 | ≤ 250 | ≤ 60 | |
| ≤ 600 | ≤ 500 | ≤ 44 | |

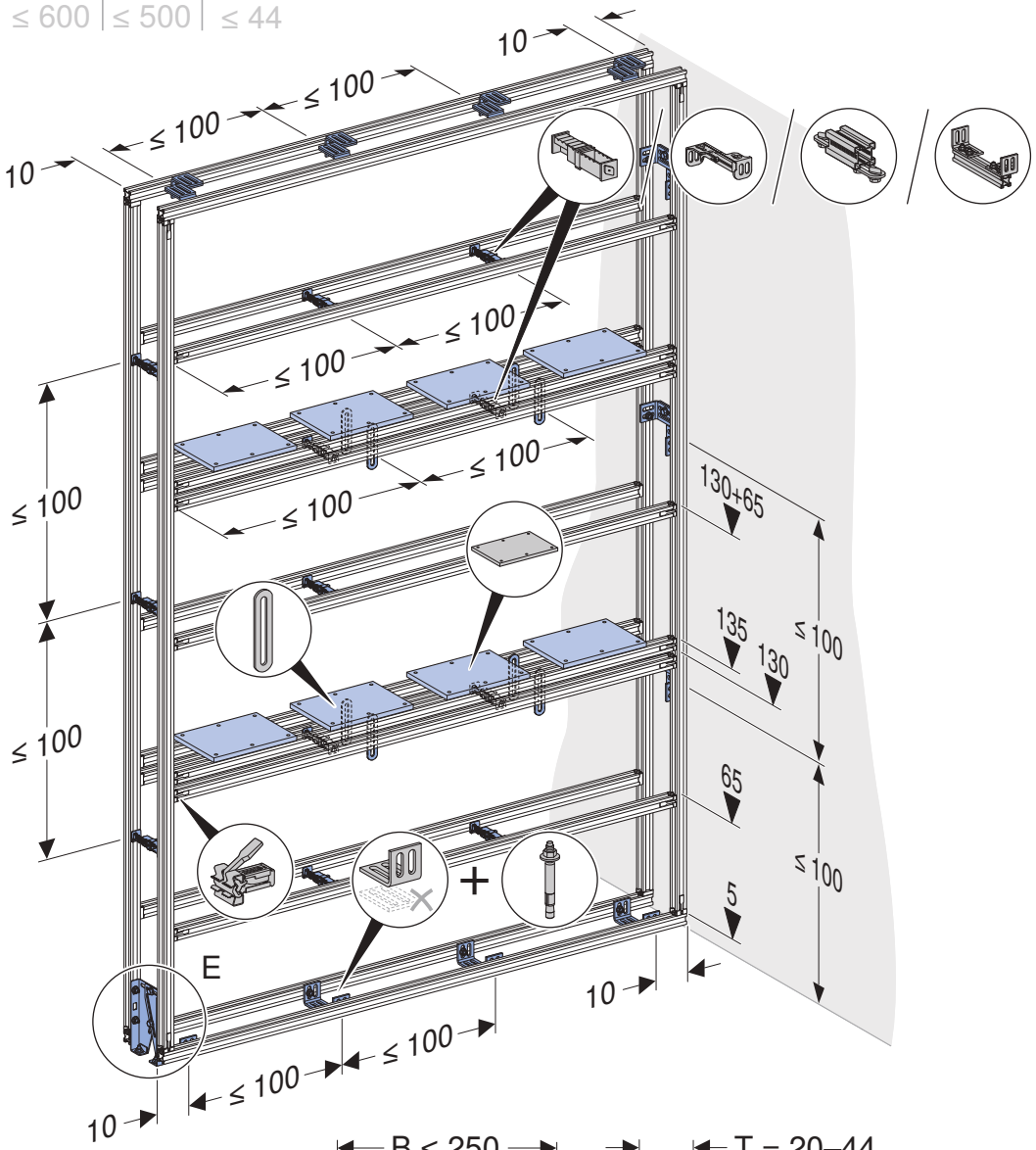


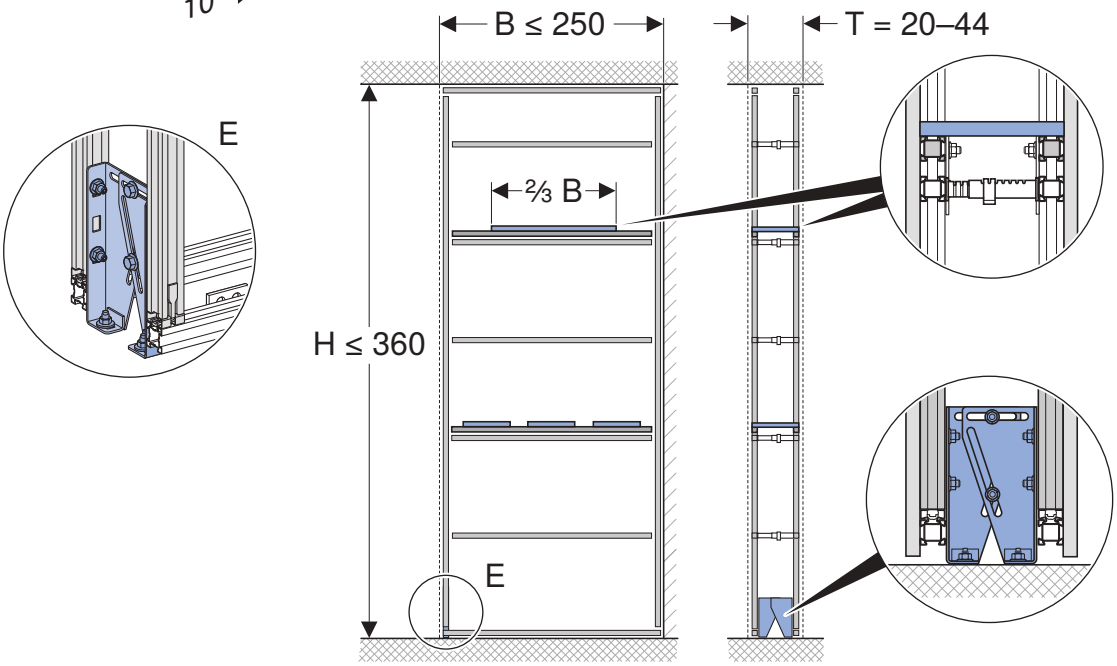

| H | B | T | |
|---|---|---|---|
| ≤ 360 | ≤ 250 | ≤ 44 | |
| ≤ 360 | ≤ 250 | ≤ 60 | ✓ |
| ≤ 600 | ≤ 500 | ≤ 44 | |

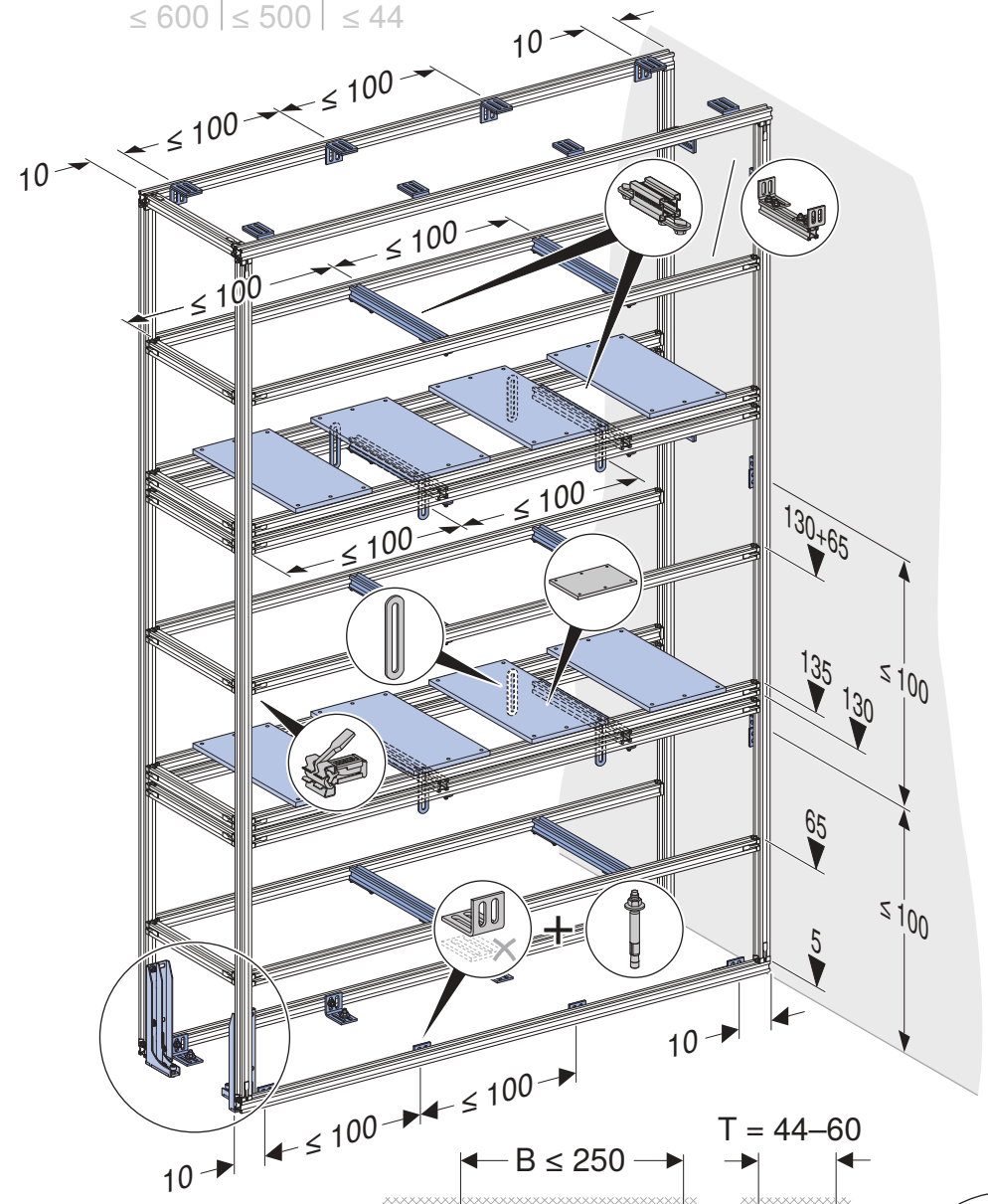


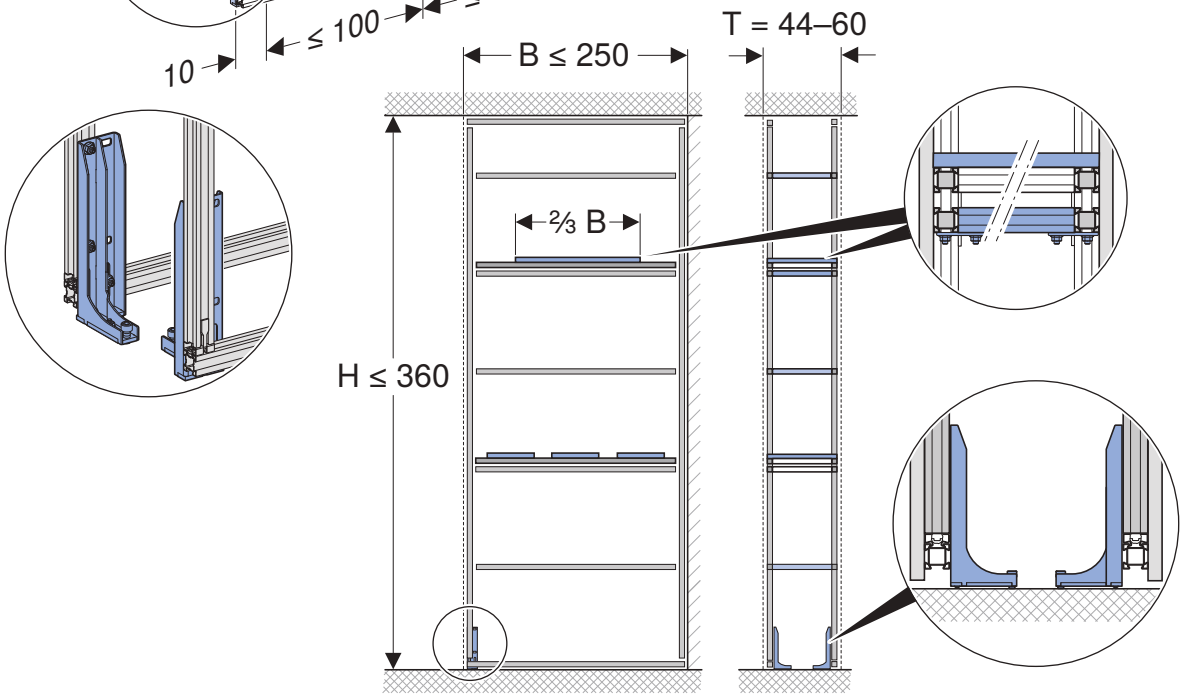



36028805360494219 © 05-2025
964.124.00.0(07)

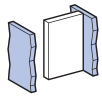

| H | B | T |
|---|---|---|
| ≤ 360 | ≤ 250 | ≤ 44 |
| ≤ 360 | ≤ 250 | ≤ 60 |
| ≤ 600 | ≤ 500 | ≤ 44 ✓ |







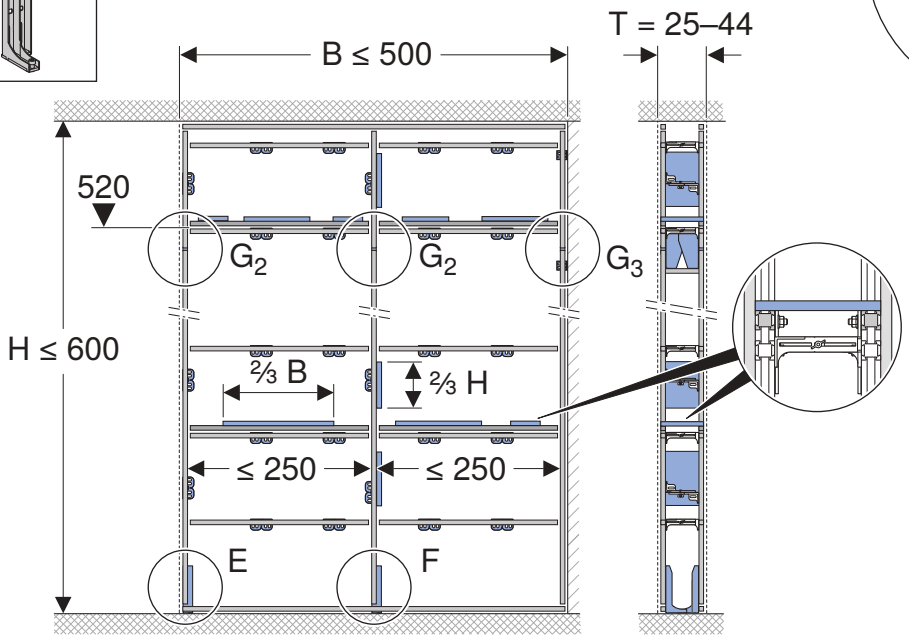


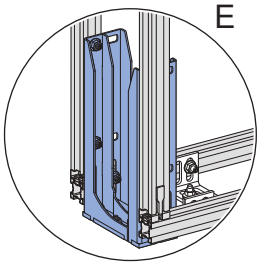


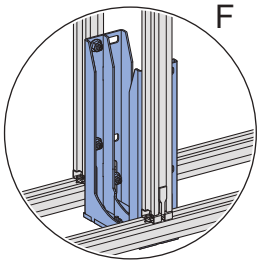

| H | B | T | |
|---|---|---|---|
| ≤ 360 | ≤ 250 | ≤ 44 | ✓ |
| ≤ 600 | ≤ 500 | ≤ 44 | |

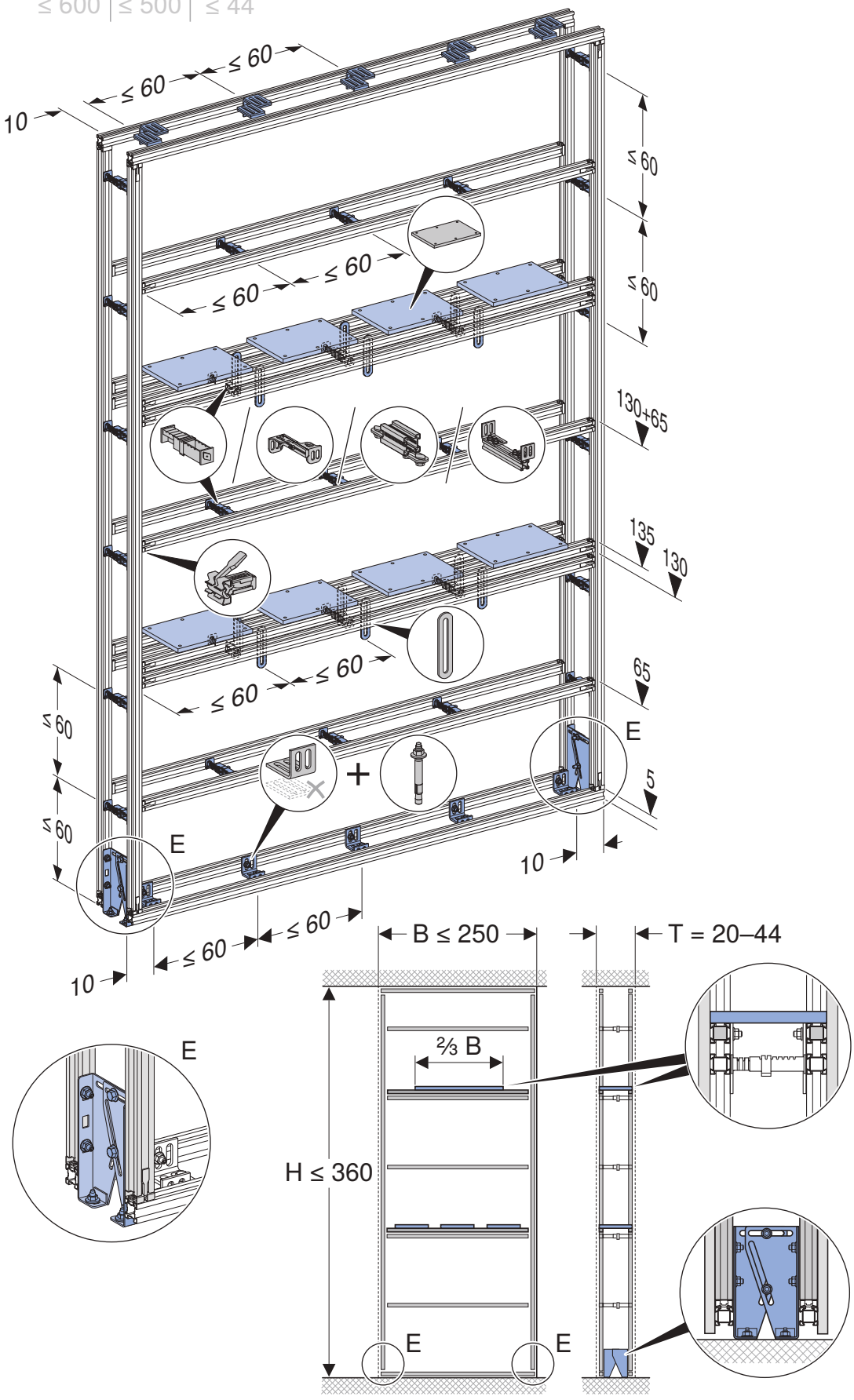



36028805360494219 © 05-2025
964.124.00.0(07)

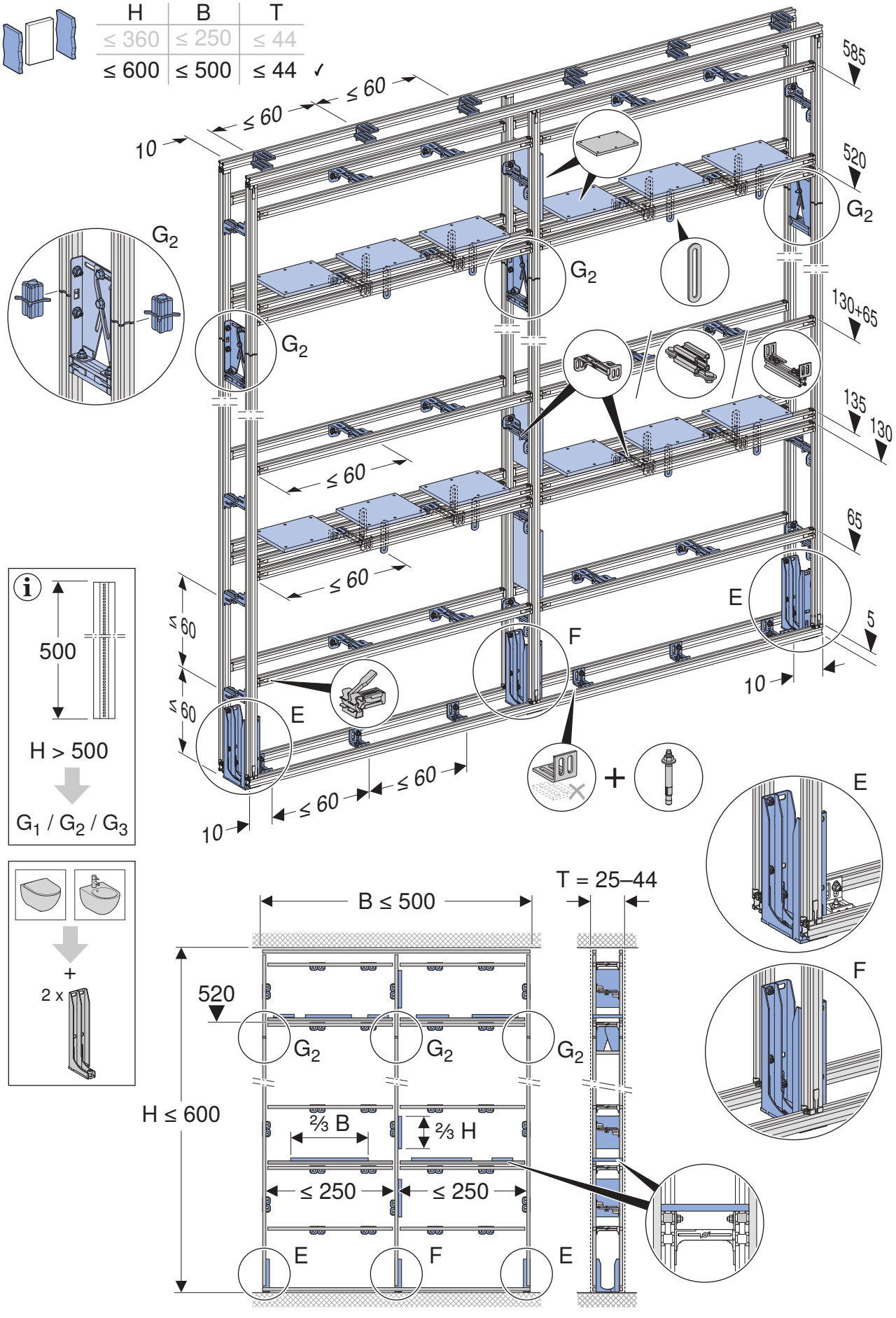
H
B
T
≤ 360
≤ 250
≤ 44
≤ 600
≤ 500
≤ 44 ✓
≤ 60
≤ 60
≤ 60
10
585
520
130+65
135
130
65
5
10
G2
G2
G2
G2
E
F
E
F
E
≤ 60
≤ 60
≤ 60
≤ 60
≤ 60
≤ 60
10
500
H > 500
G1 / G2 / G3
+
2 x
B ≤ 500
T = 25–44
520
H ≤ 600
⅔ B
⅔ H
≤ 250
≤ 250
G2
G2
G2
E
F
E

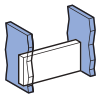

| H | B | T | |
|---|---|---|---|
| ≤ 360 | ≤ 250 | ≤ 45 | ✓ |
| ≤ 600 | ≤ 500 | ≤ 44 | |

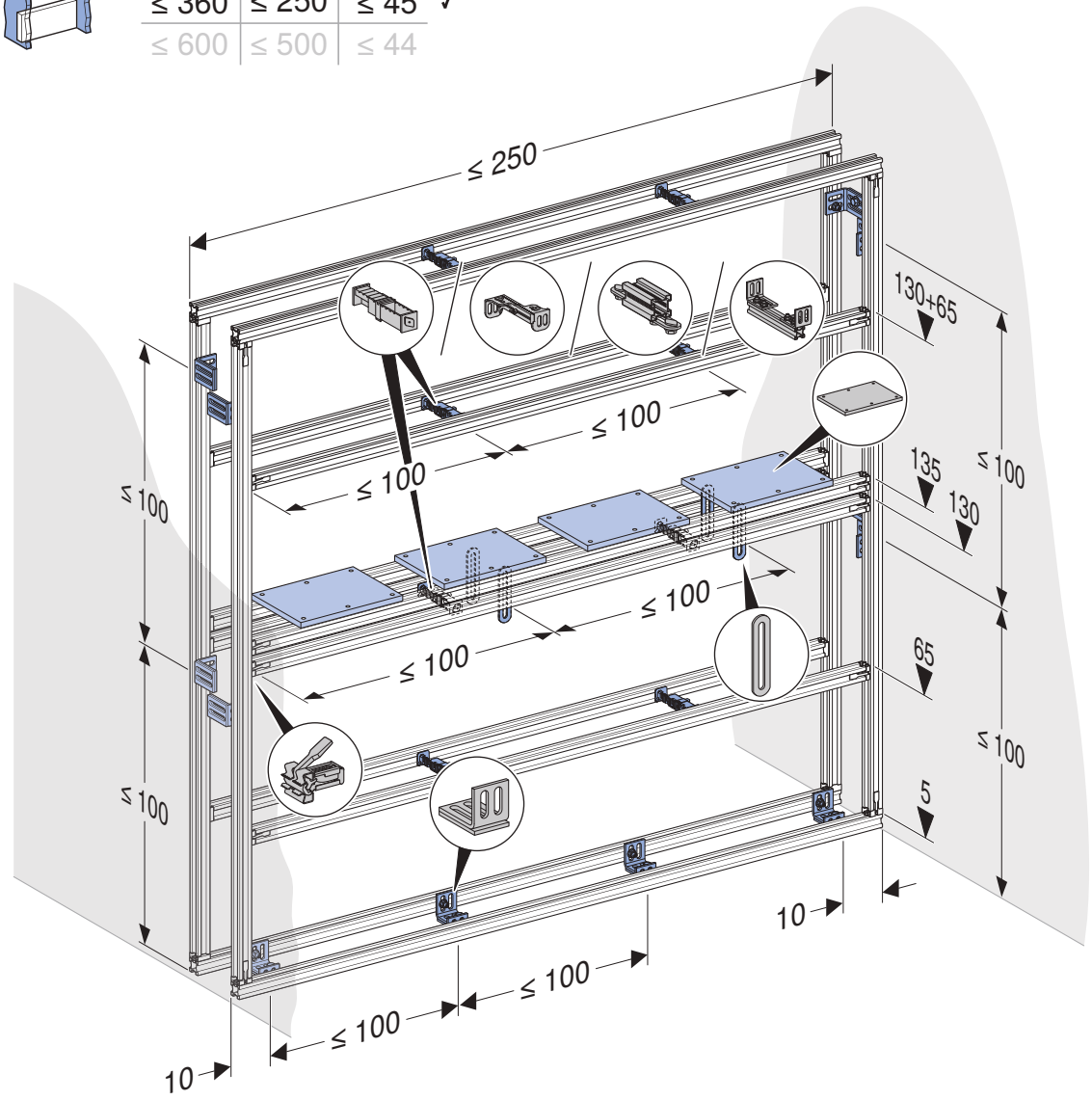


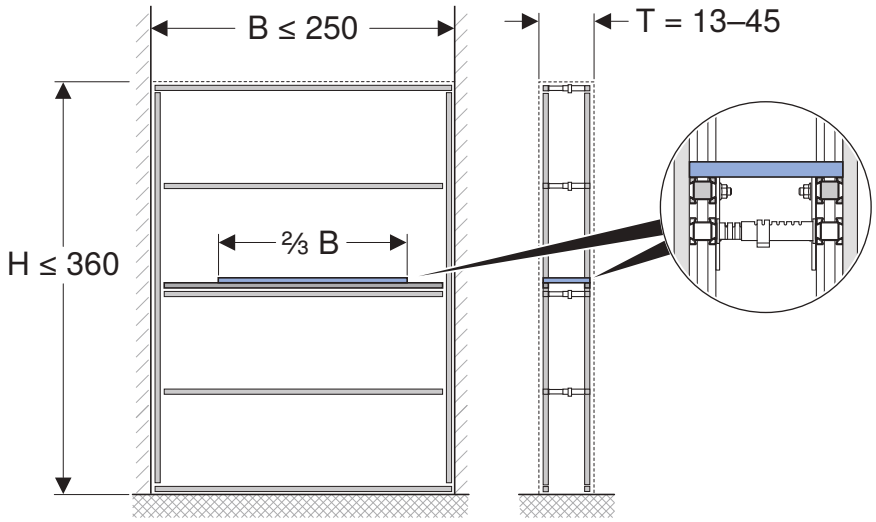



36028805360494219 © 05-2025
964.124.00.0(07)

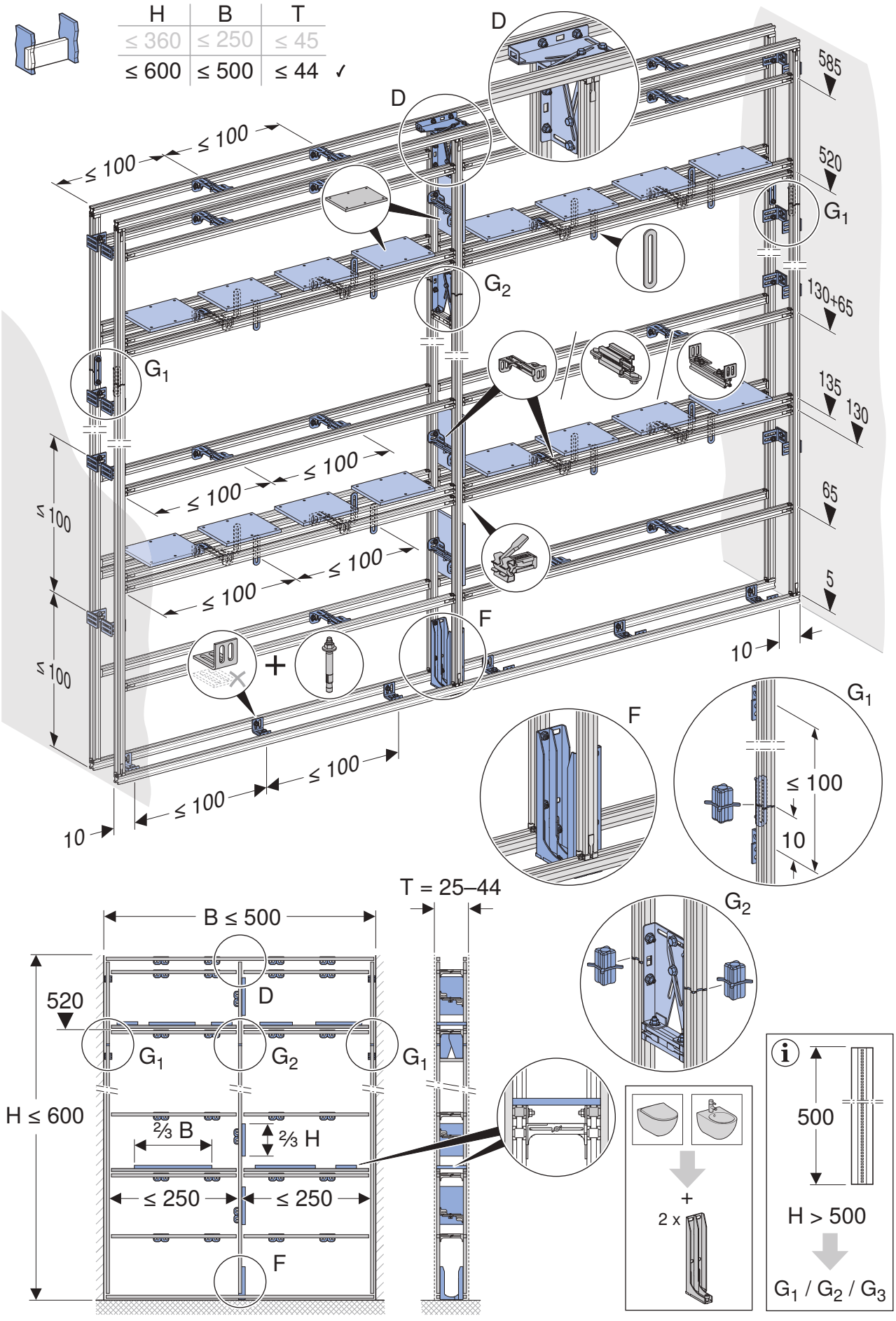
H
B
T
≤ 360
≤ 250
≤ 45
≤ 600
≤ 500
≤ 44 ✓
D
G1
G2
F
≤ 100
585
520
130+65
135
130
65
5
10
T = 25–44
B ≤ 500
H ≤ 600
⅔ B
⅔ H
2 x
500
H > 500
G1 / G2 / G3

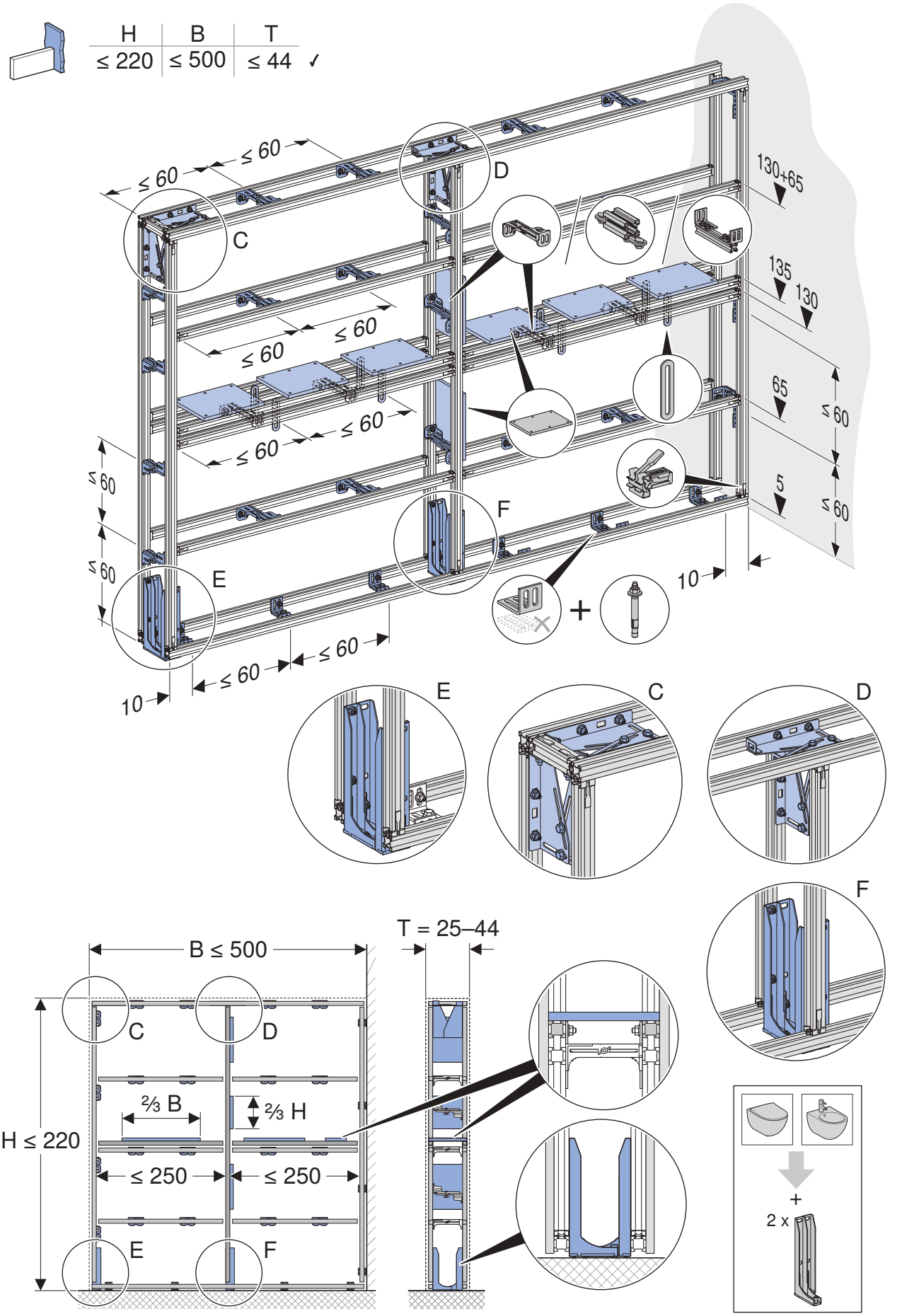



36028805360494219 © 05-2025
964.124.00.0(07)

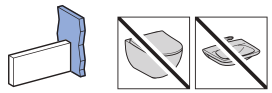

| H | B | T | |
|---|---|---|---|
| ≤ 200 | ≤ 100 | ≤ 45 | ✓ |

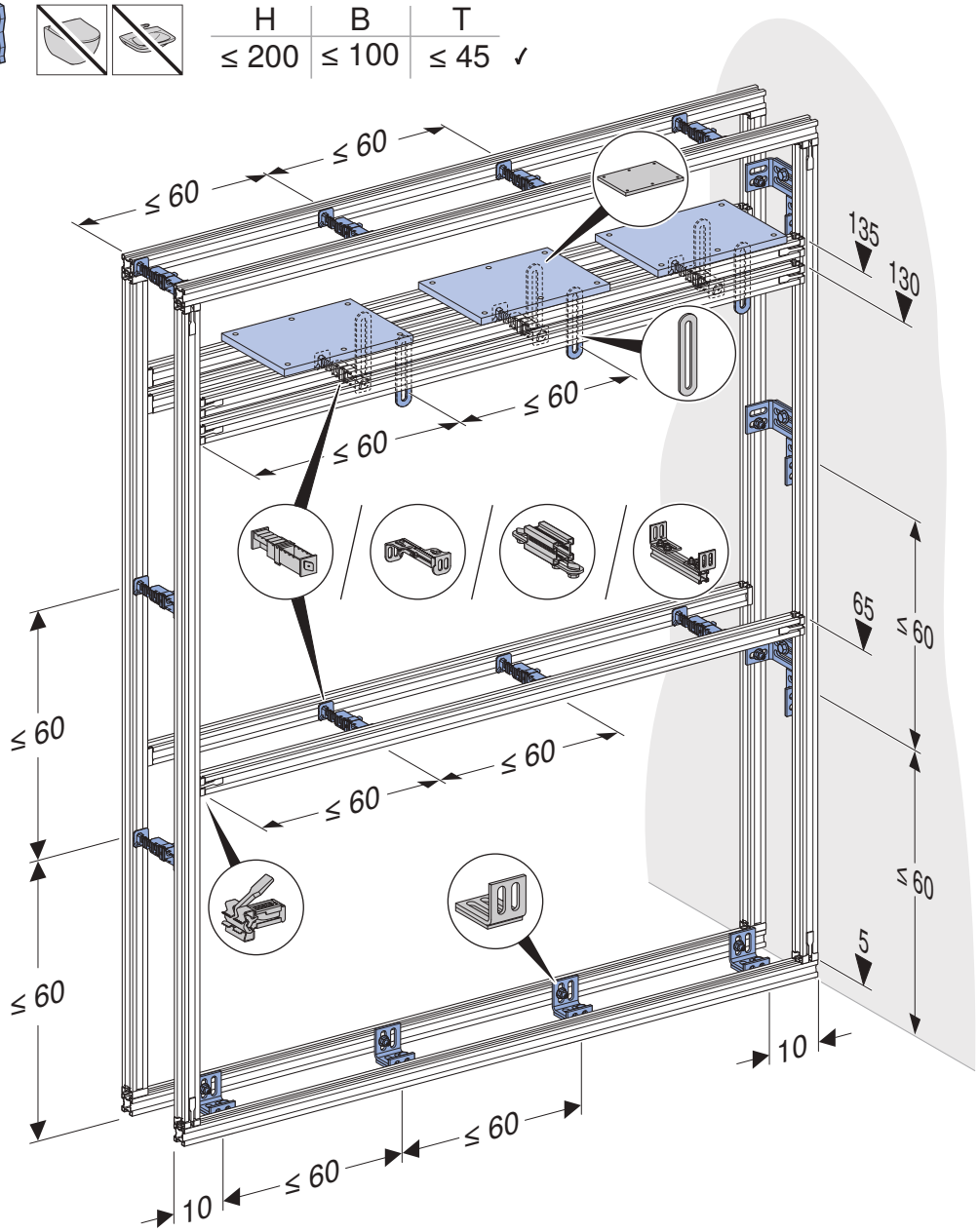


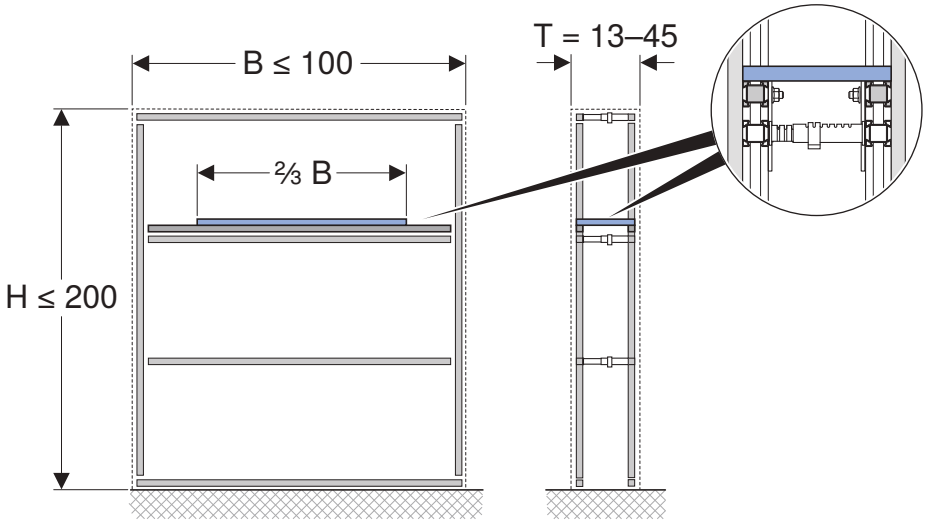

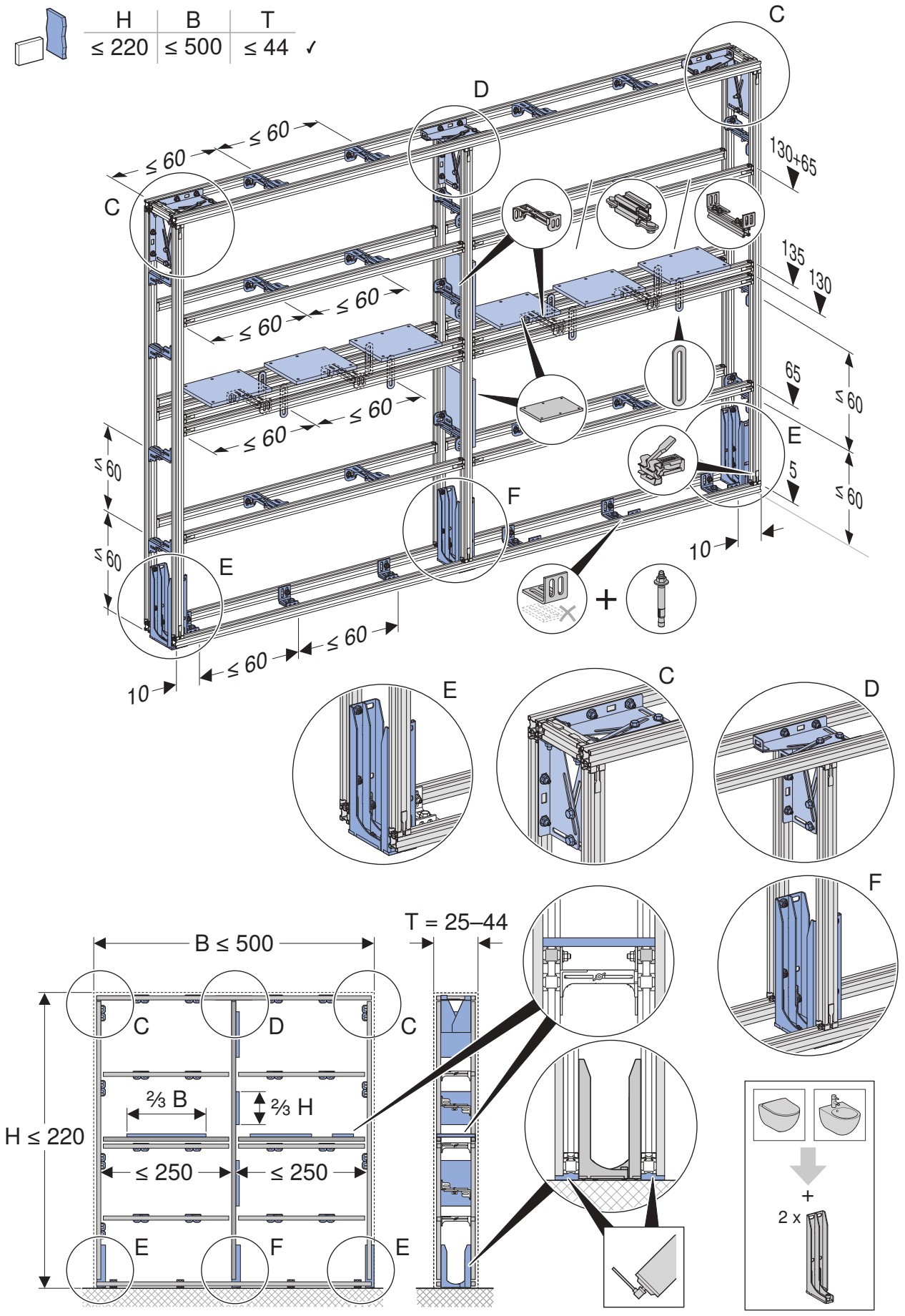



36028805360494219 © 05-2025
964.124.00.0(07)

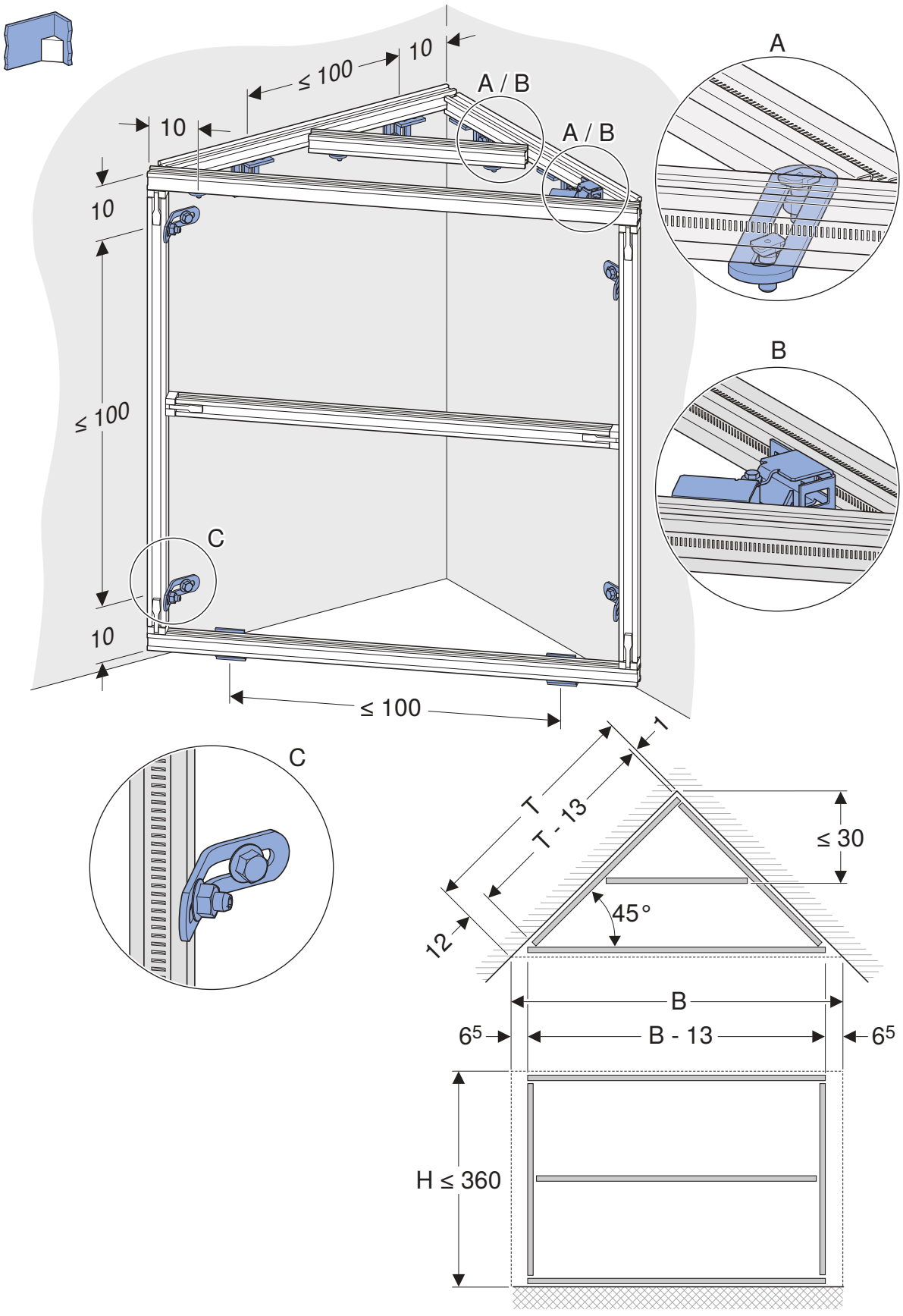
≤ 100
10
10
A / B
A / B
10
10
≤ 100
≤ 100
A
B
C
C
T
T - 13
1
≤ 30
45°
12
B
B - 13
6⁵
6⁵
H ≤ 360

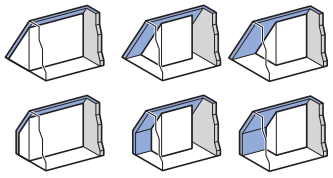

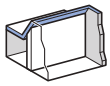

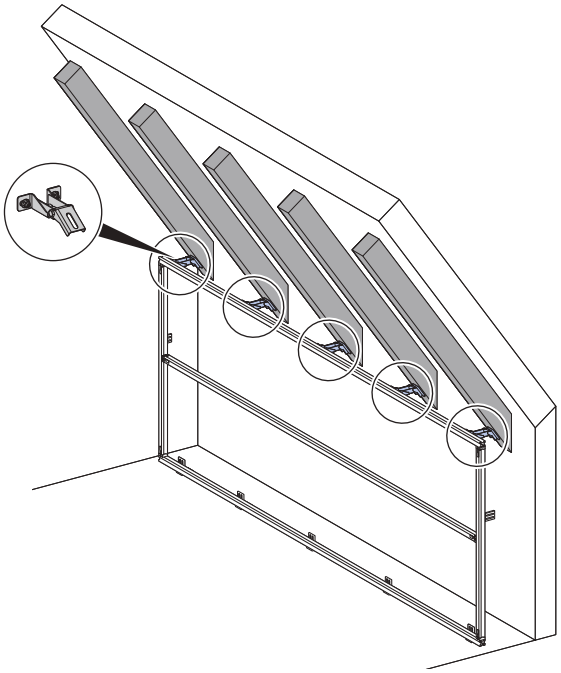

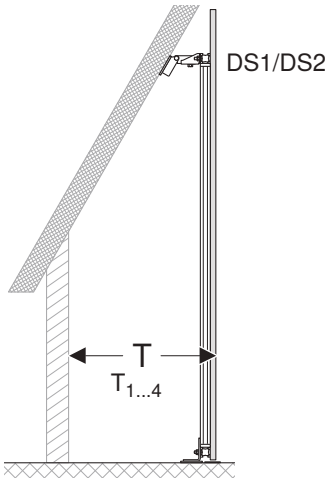


| | $T_1$ | $T_2$ | $T_3$ | $T_4$ | $T_{DS1}$ | $T_{DS2}$ |
|---|---|---|---|---|---|---|
| T ≤ 45  | 19–24 | $24^5$–36 | $36^5$–45 | 19–45 | 19–45 | 25–45 |
| T ≤ 125  | × | × | × | 45–125 | 45–125 | 45–125 |
| T ≤ 70 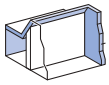 | $21^5$–24 | $24^5$–36 | $36^5$–70 | $21^5$–70 | $21^5$–70 | × |







Installation Manual

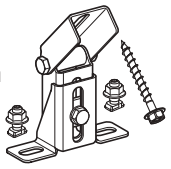

Art.-Nr. 461.191.00.1



36028805360494219 © 05-2025

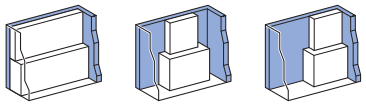

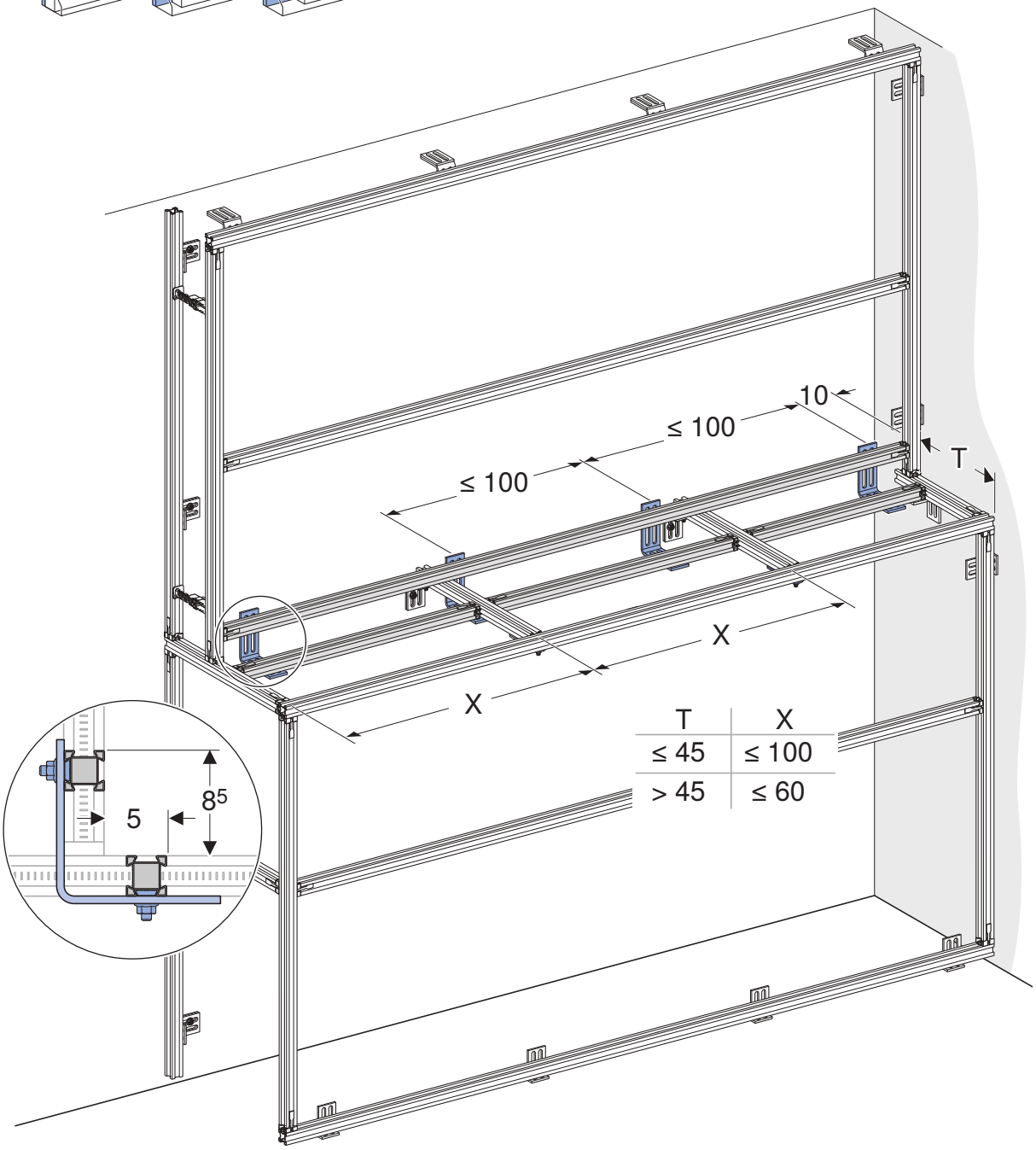


| T | X |
|---|---|
| ≤ 45 | ≤ 100 |
| > 45 | ≤ 60 |







Installation Manual

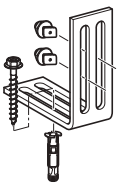

Art.-Nr. 461.185.00.1

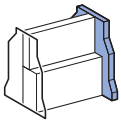

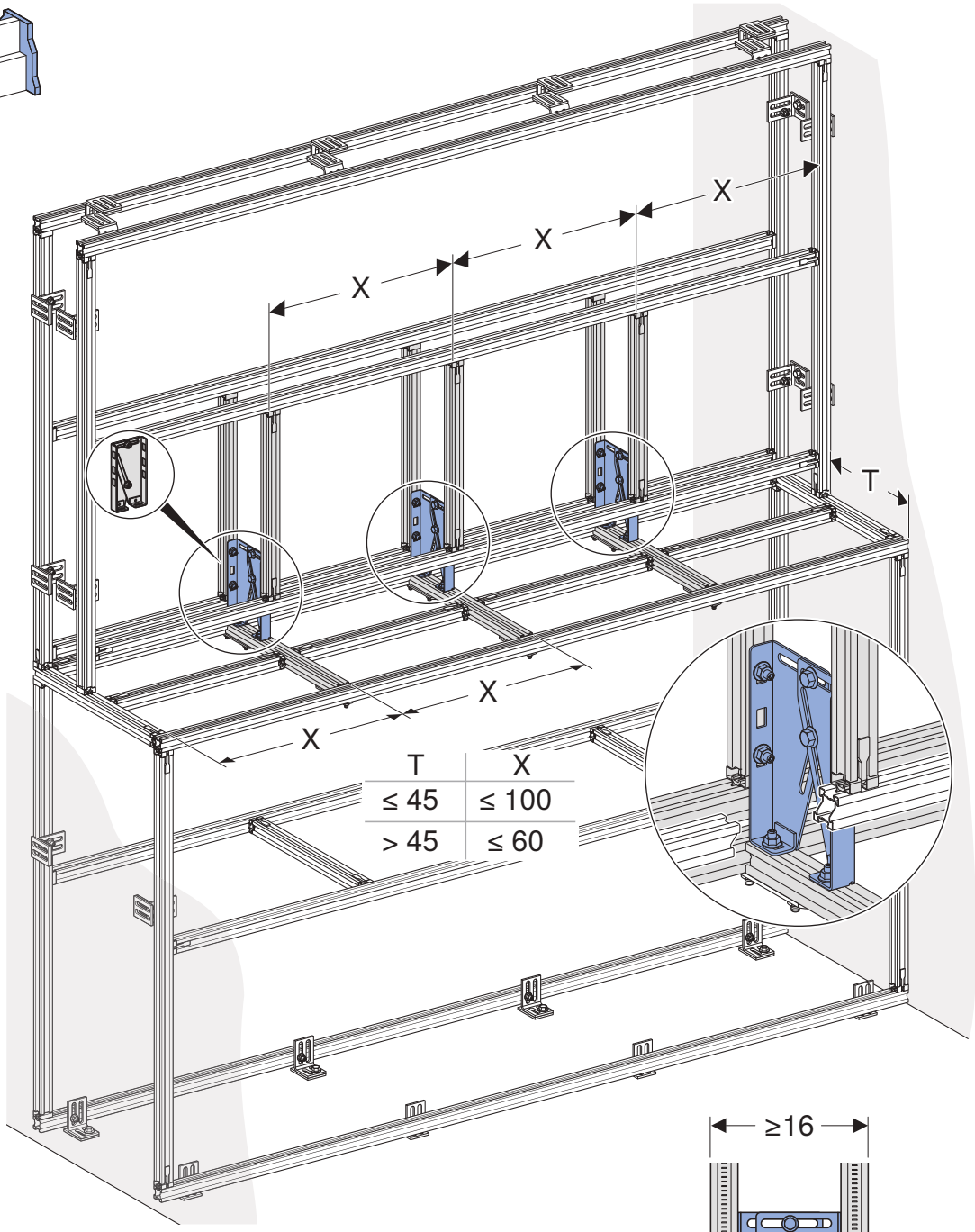


| T | X |
|---|---|
| ≤ 45 | ≤ 100 |
| > 45 | ≤ 60 |







Installation Manual



Art.-Nr. 461.660.00.1

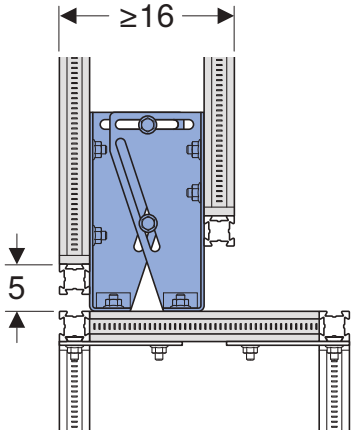



36028805360494219 © 05-2025
964.124.00.0(07)

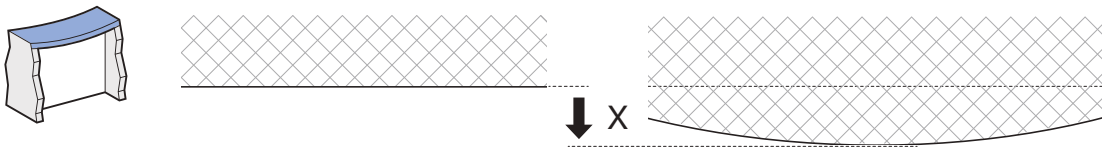


X [mm]

0–5 (Standard Installation)

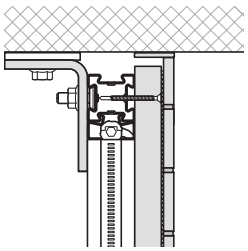

5–10






(30x)




Technical Data Sheet

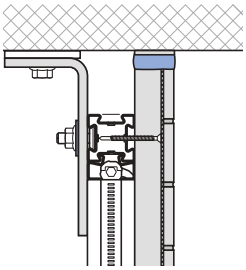

10–25






(30x)




Technical Data Sheet

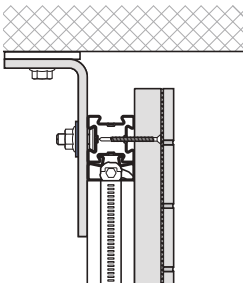

5–25




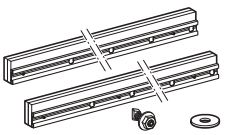





Installation Manual

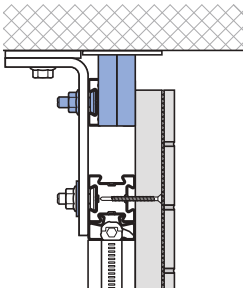

36028805360494219 © 05-2025
964.124.00.0(07)

**Geberit International AG**
**Schachenstrasse 77, CH-8645 Jona**
**documentation@geberit.com**
**www.geberit.com**



360288053604942l9 © 05-2025
964.124.00.0(07)