GEBERIT

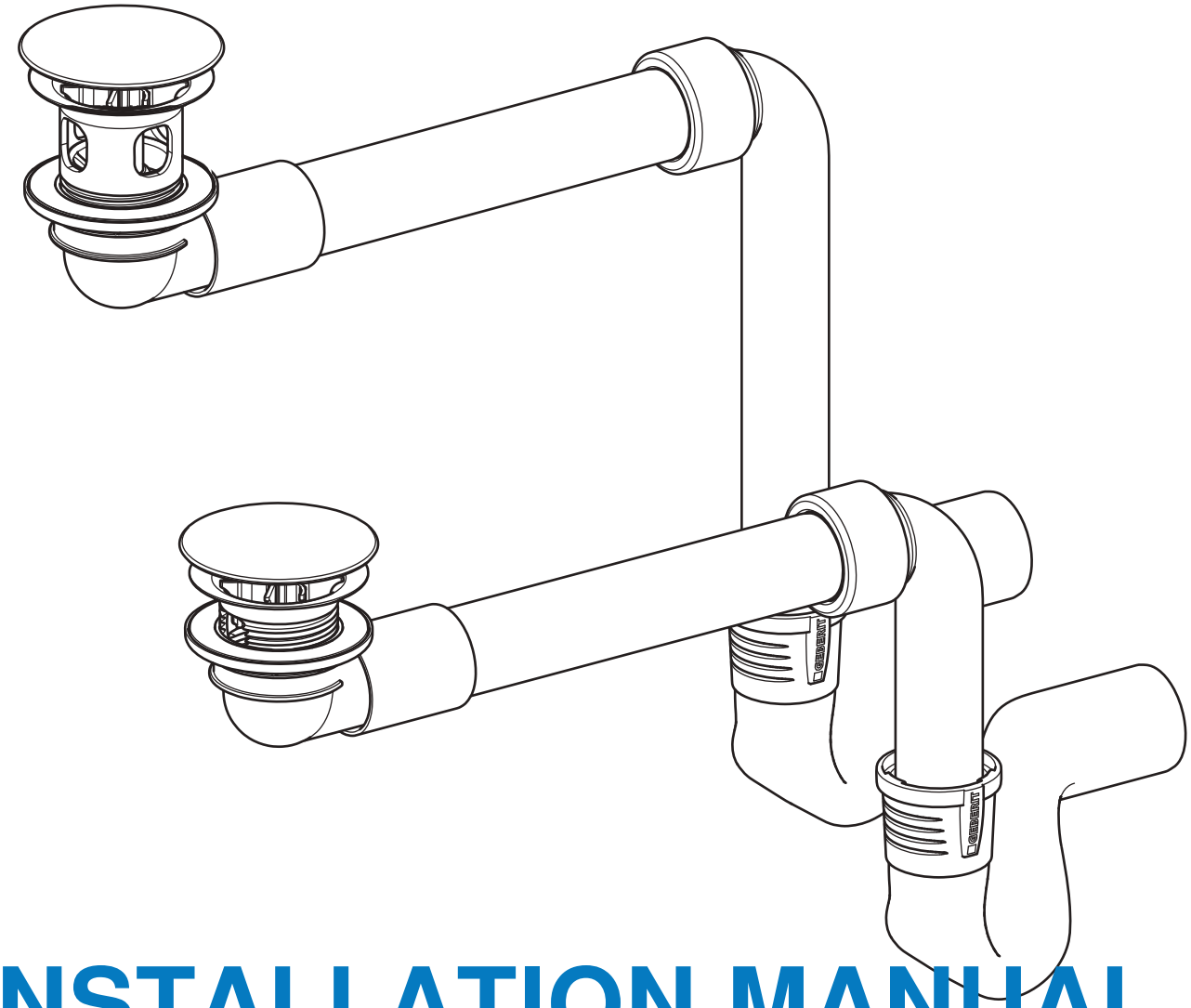

INSTALLATION MANUAL

MONTAGEANLEITUNG
INSTRUCTIONS DE MONTAGE
ISTRUZIONI PER IL MONTAGGIO

KNOW HOW INSTALLED

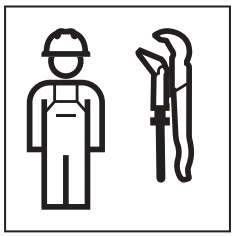

973.092.00.0(00)

cm

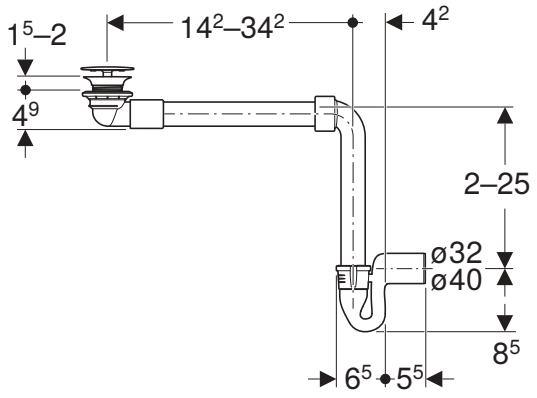

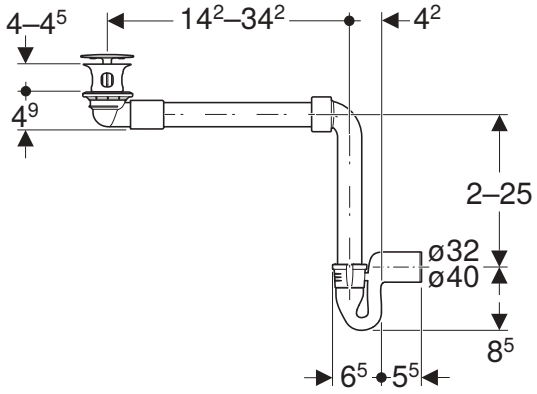

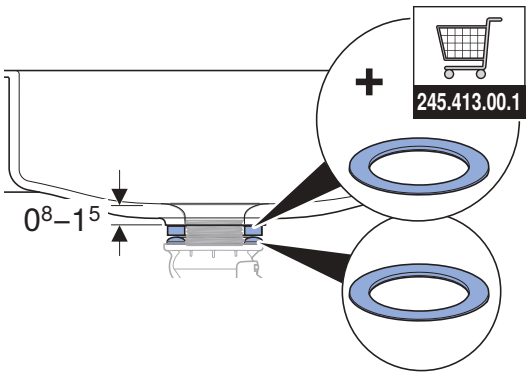

1

1

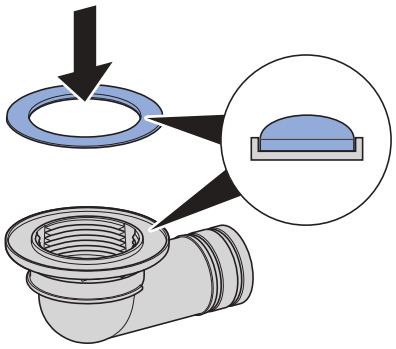

2

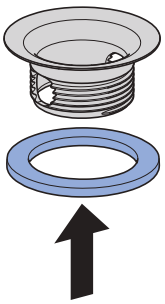

3

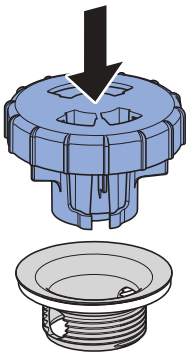

9007215472318475 © 12-2025
973.092.00.0(00)

4

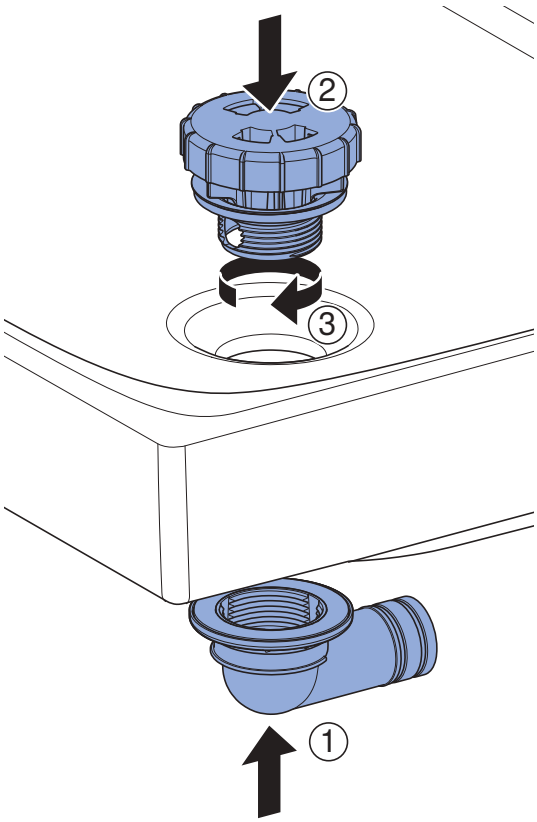

5

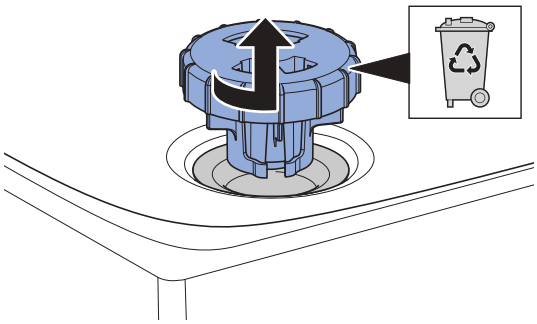

6

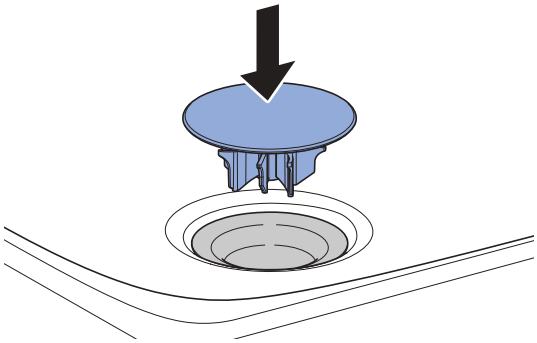

2

1

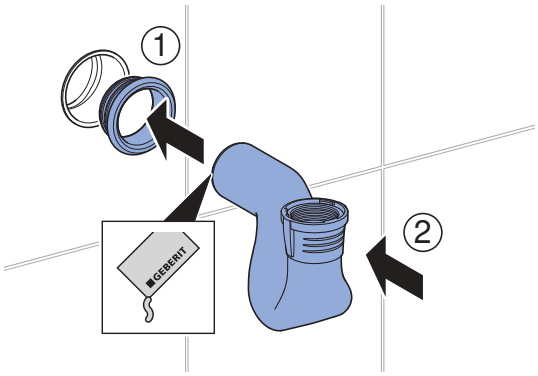

2

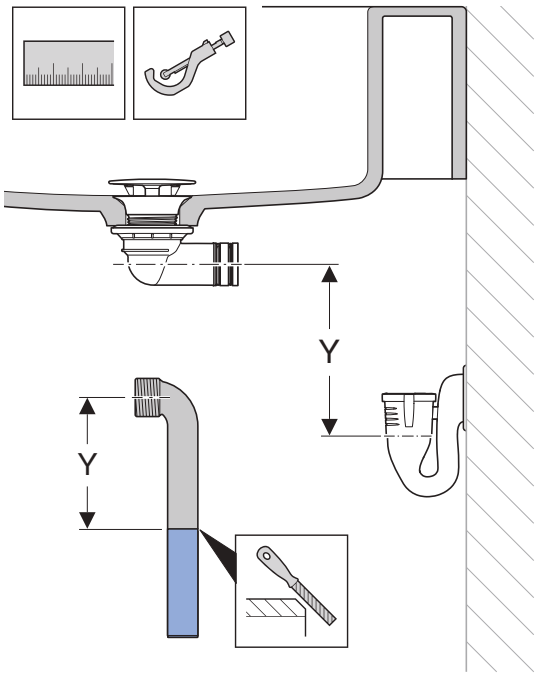

3

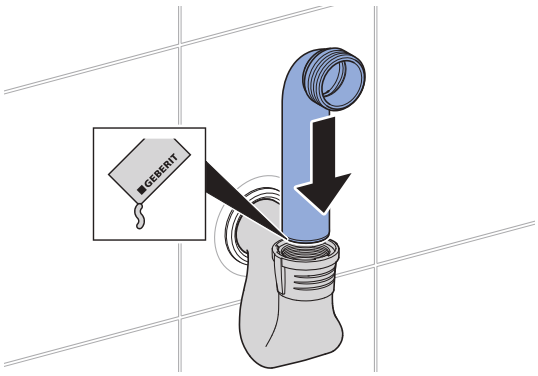

3

1

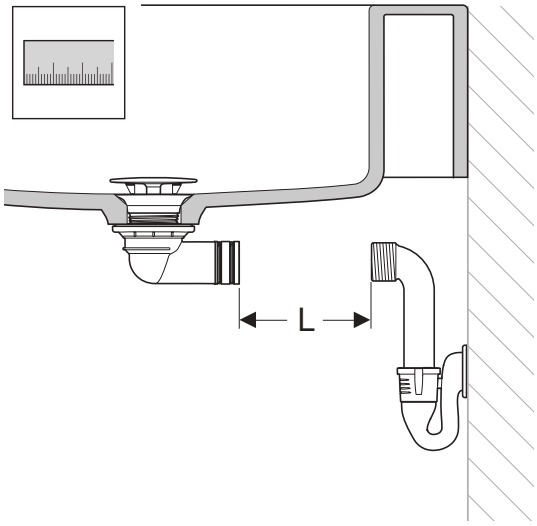

2

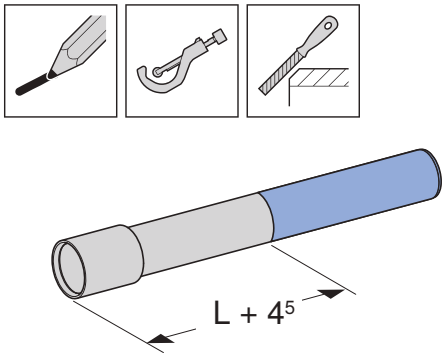

3

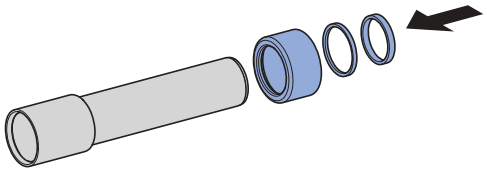

4

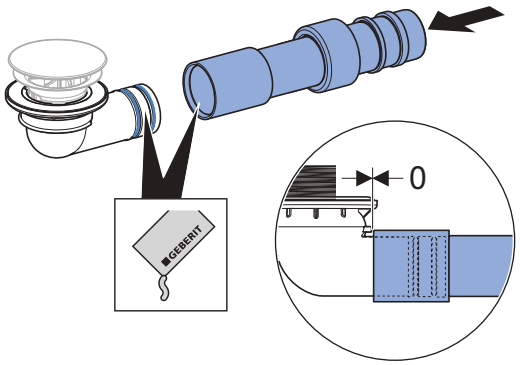

5

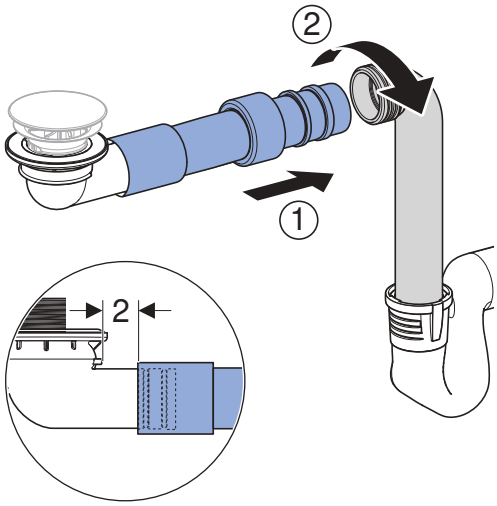

Geberit International AG
Schachenstrasse 77, CH-8645 Jona
documentation@geberit.com
www.geberit.com

9007215472318475 © 12-2025
973.092.00.0(00)