GEBERIT

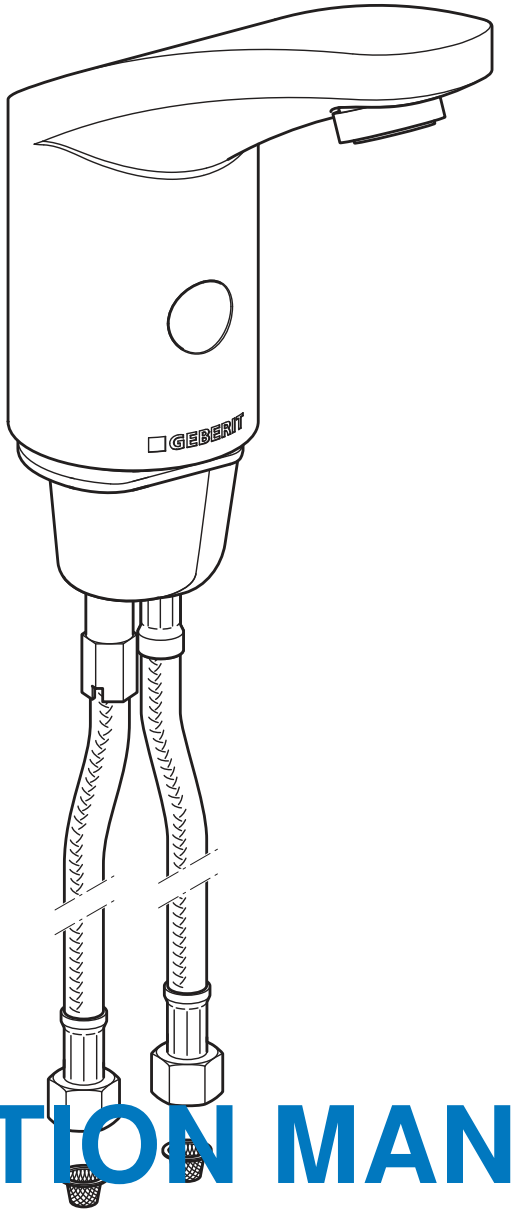

INSTALLATION MANUAL

MONTAGEANLEITUNG
INSTRUCTIONS DE MONTAGE
ISTRUZIONI PER IL MONTAGGIO

KNOW HOW INSTALLED

CONNECT

970.652.00.0(00)

1

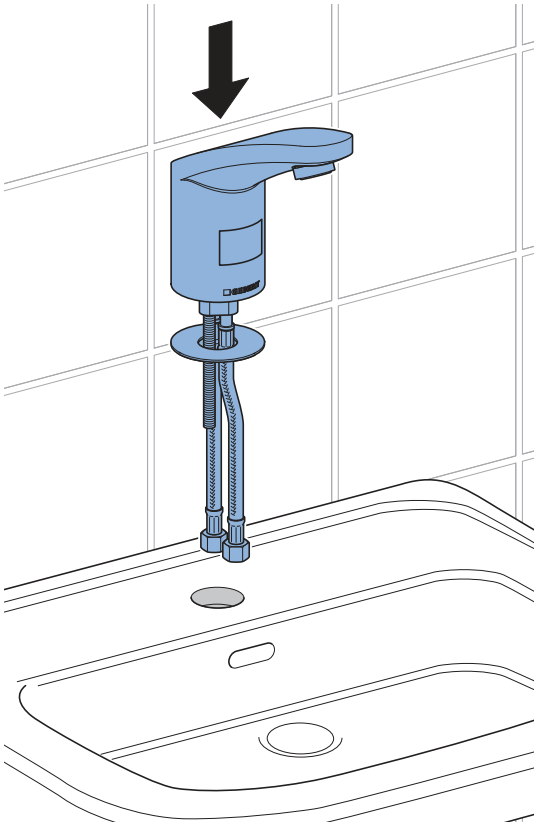

2

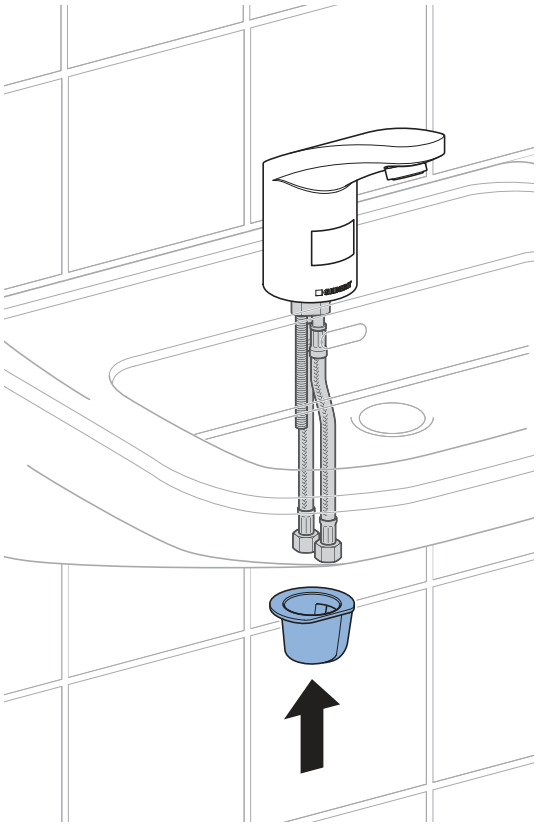

3

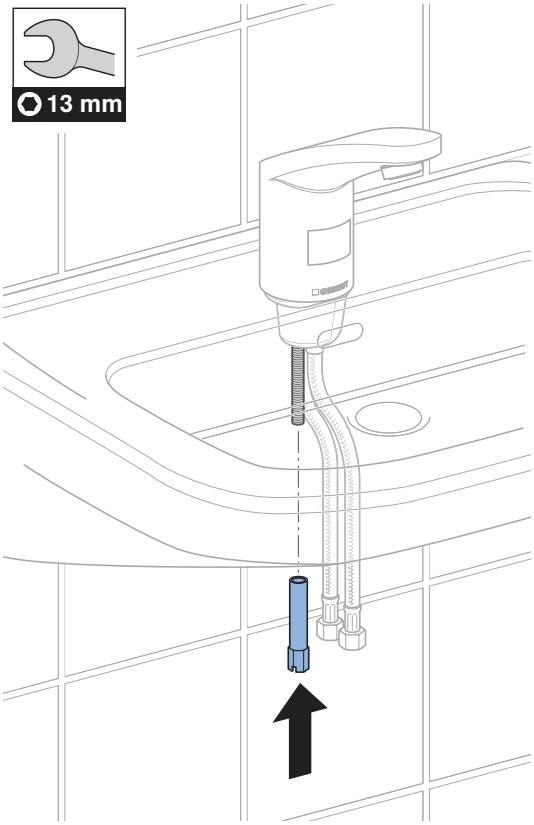

4

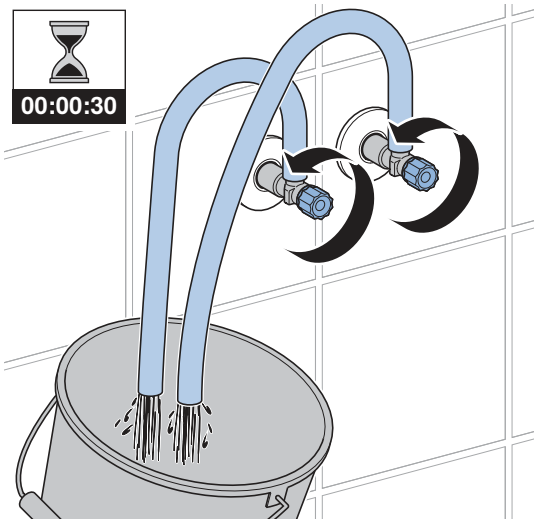

8702656907 © 08-2021
970.652.00.0(00)

5

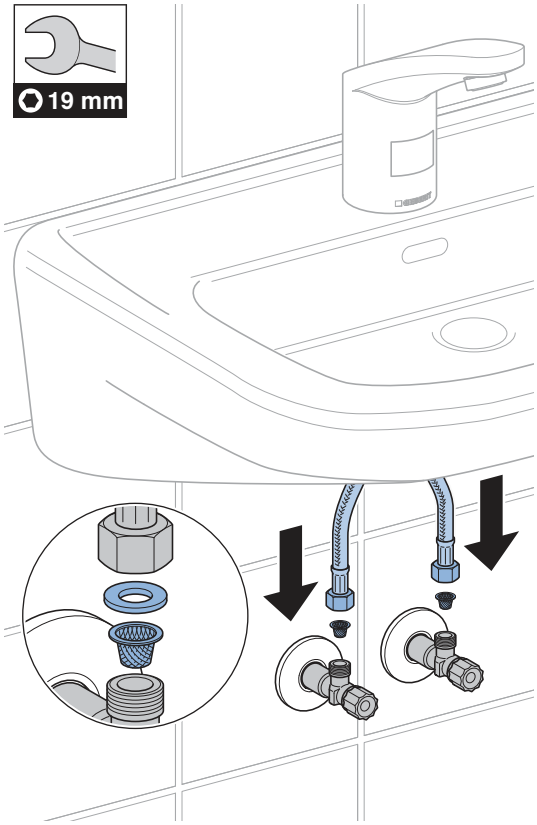

6

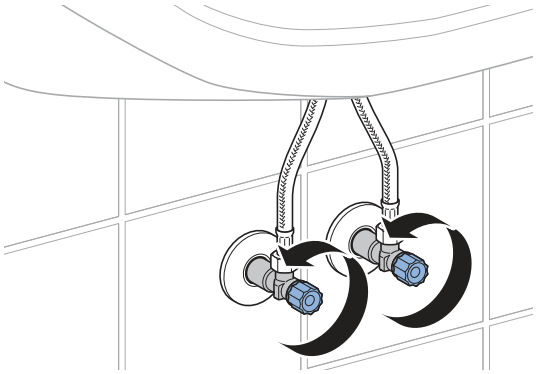

1

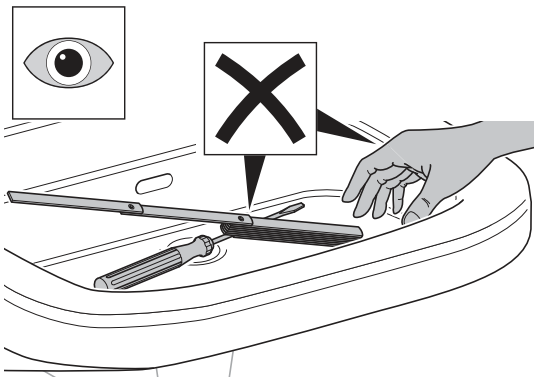

2

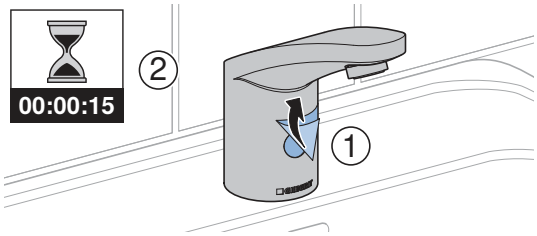

3

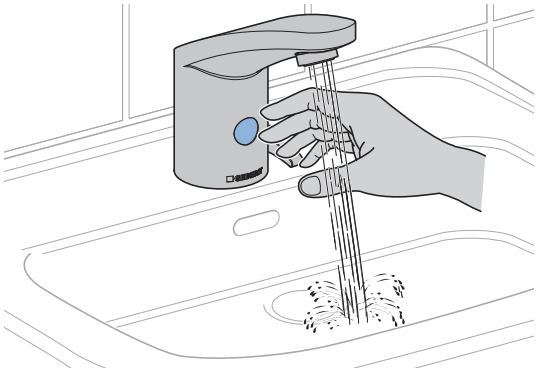

2

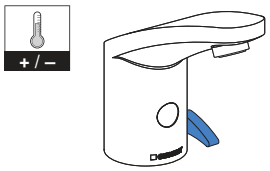

→ 2 A 4

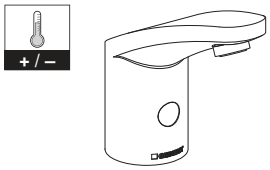

→ 2 B 5

2 A

✓

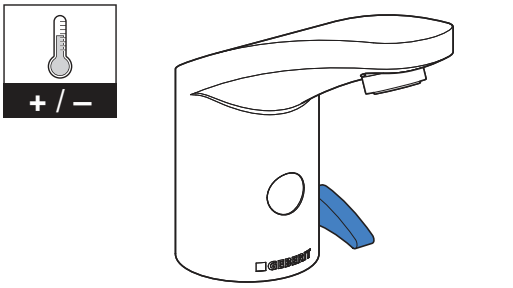

1

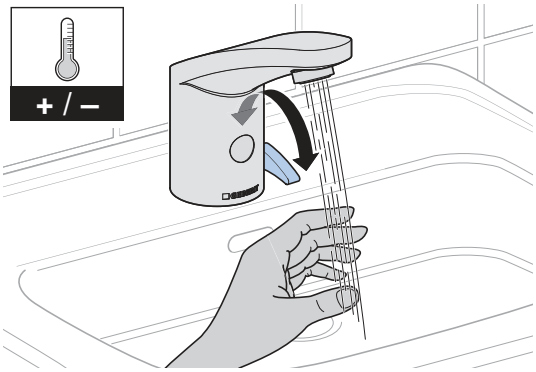

2

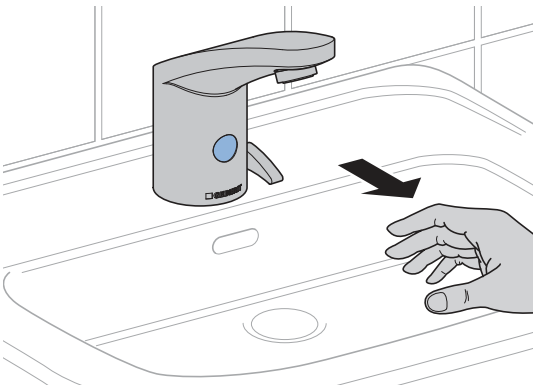

8702656907 © 08-2021
970.652.00.0(00)

2 B

✓

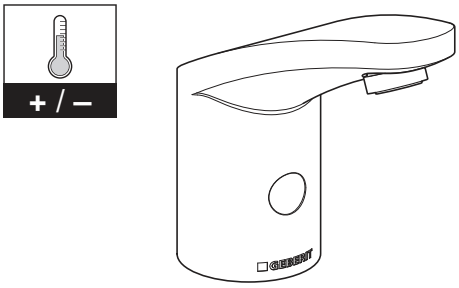

1

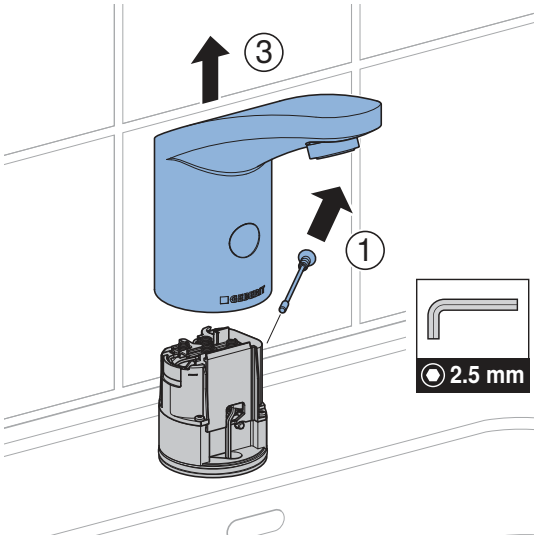

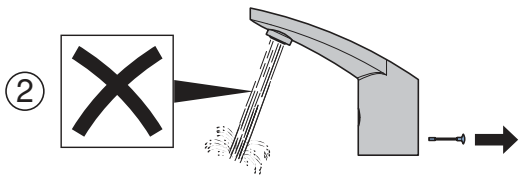

2

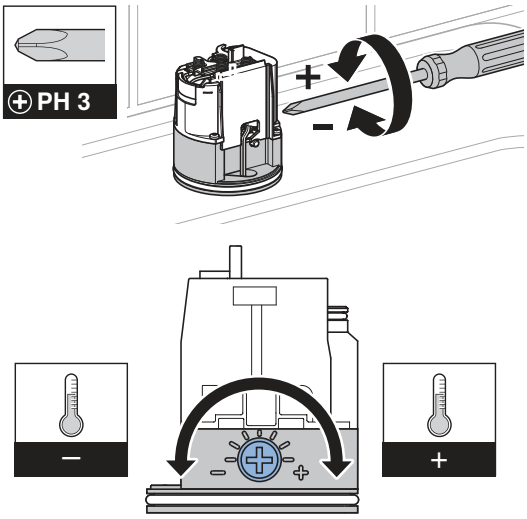

3

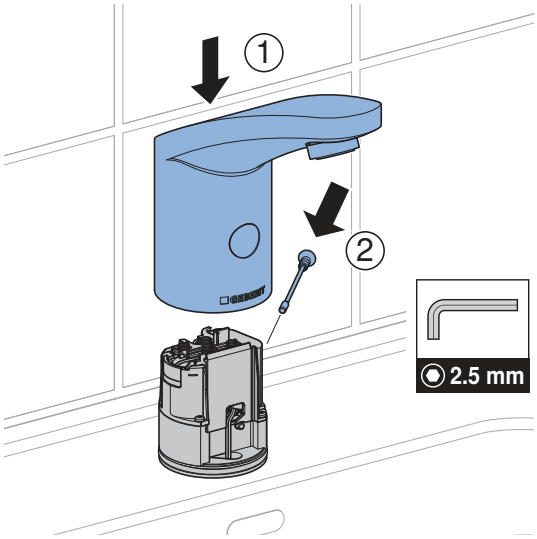

4

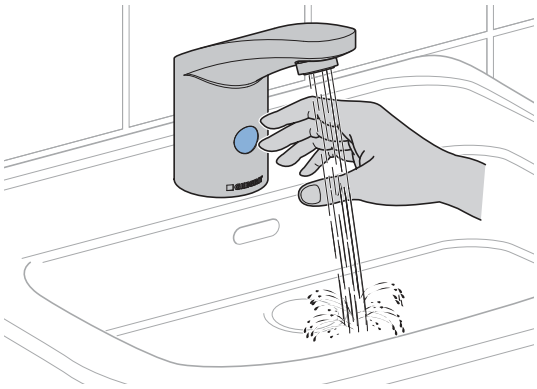

5

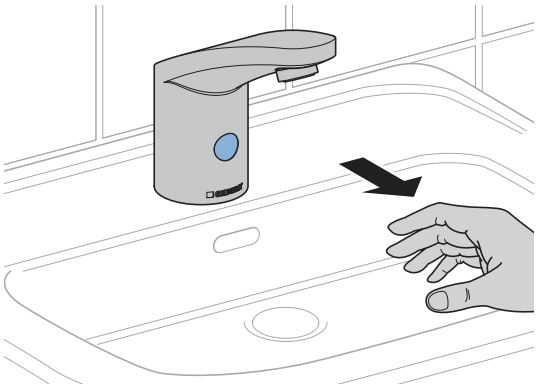

▶

Geberit
Apps

https://gbrt.io/dsvFD00

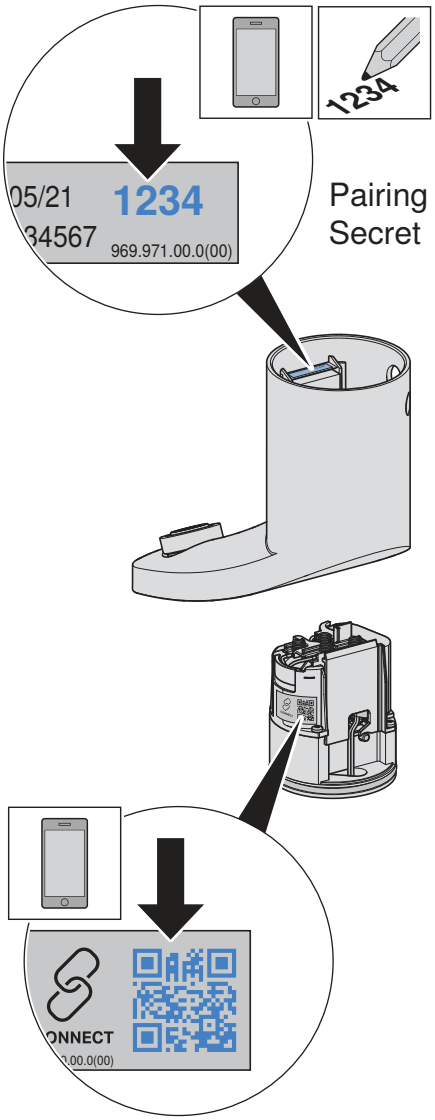

8702656907 © 08-2021
970.652.00.0(00)

Geberit International AG
Schachenstrasse 77, CH-8645 Jona
documentation@geberit.com
www.geberit.com

8702656907 © 08-2021
970.652.00.0(00)