GEBERIT

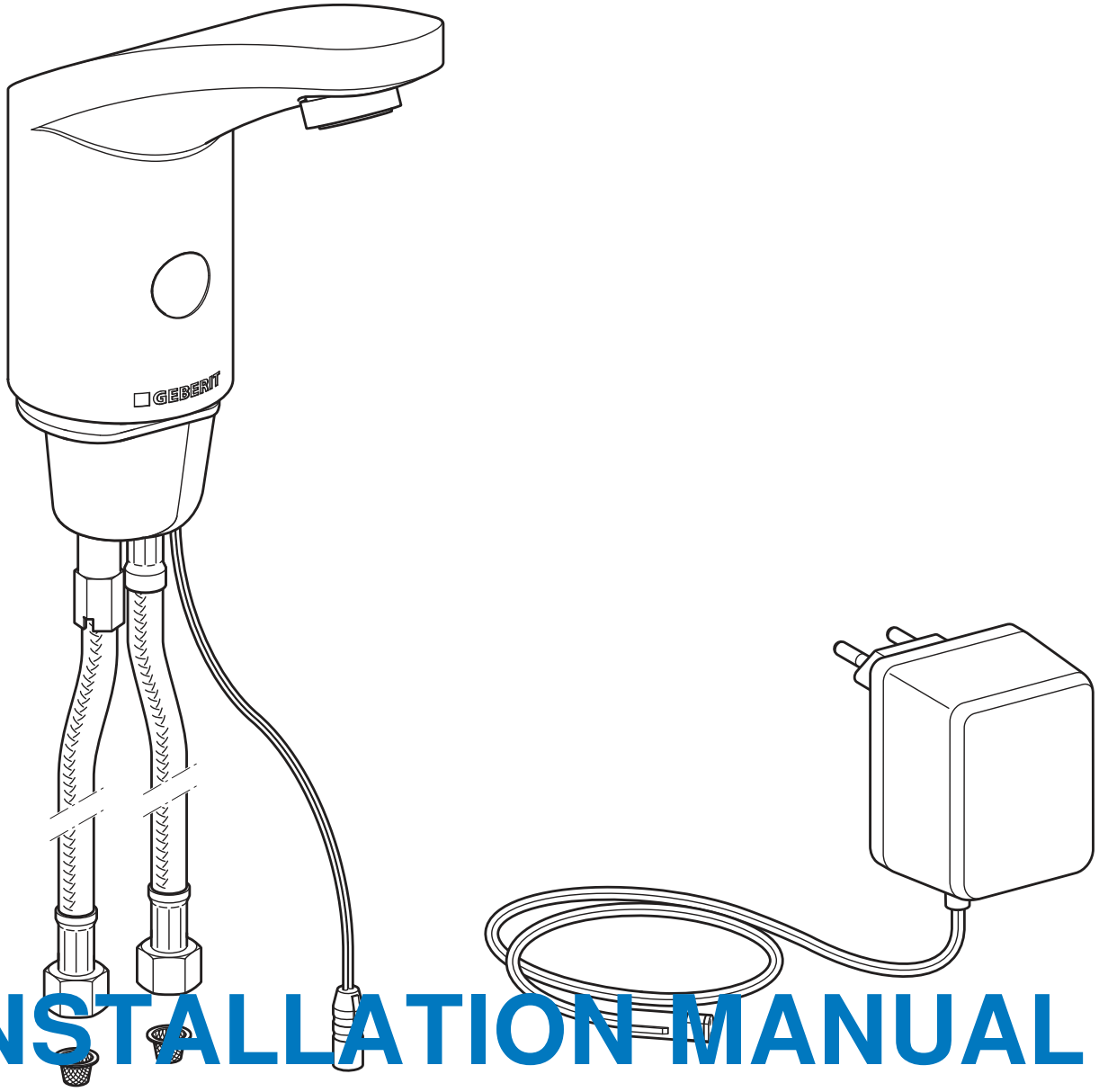

INSTALLATION MANUAL

MONTAGEANLEITUNG
INSTRUCTIONS DE MONTAGE
ISTRUZIONI PER IL MONTAGGIO

KNOW HOW INSTALLED

CONNECT

970.651.00.0(00)

1

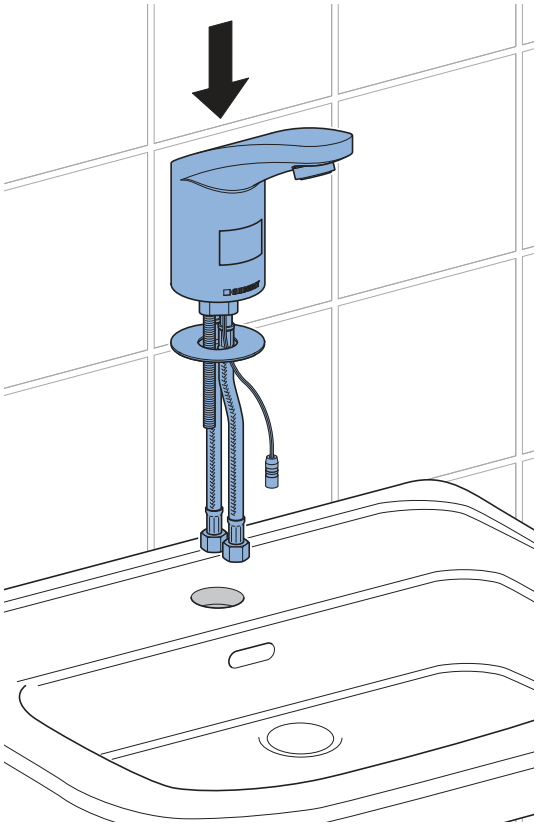

2

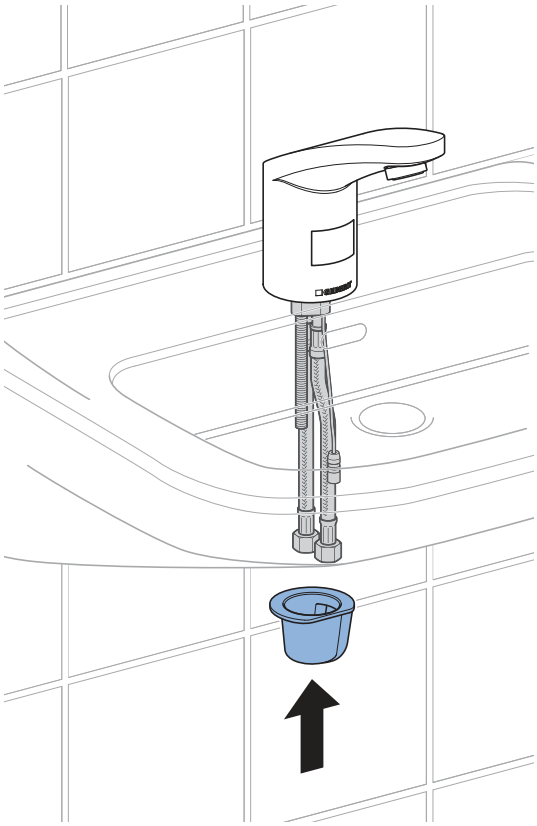

3

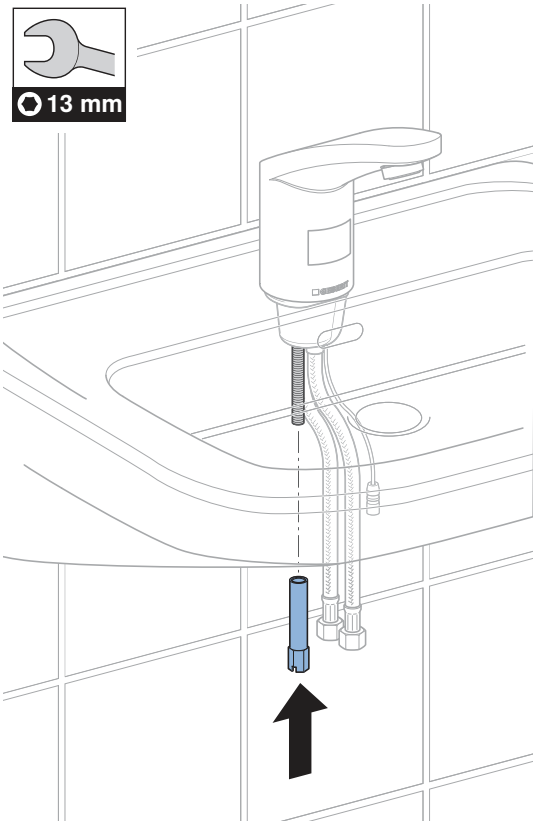

4

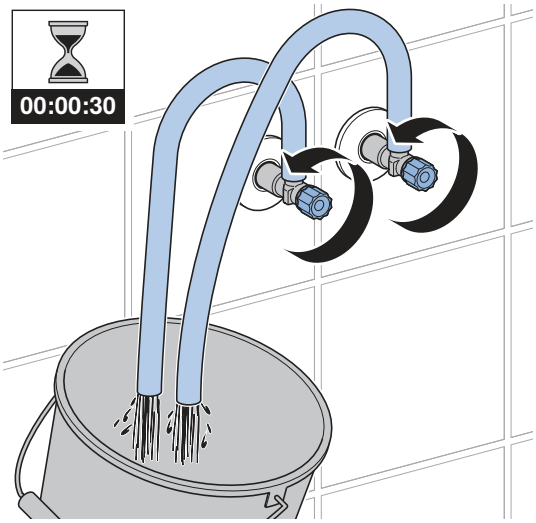

8701475851 © 08-2021
970.651.00.0(00)

5

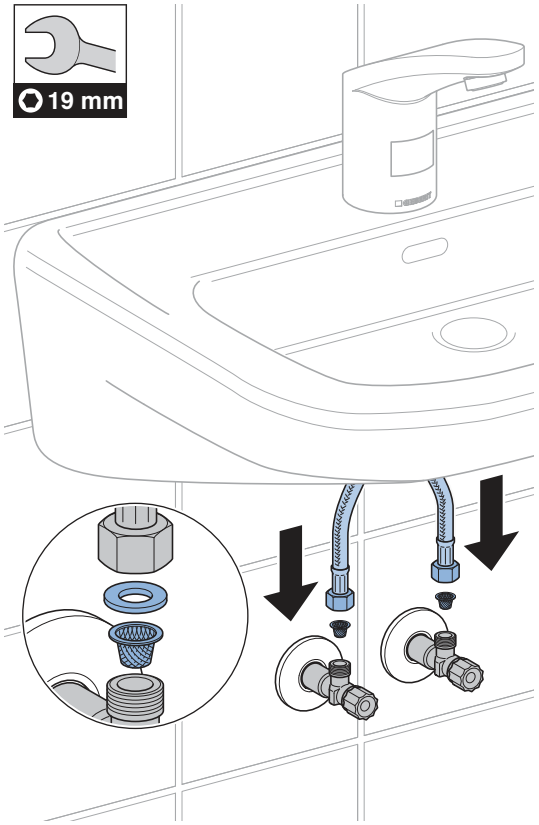

6

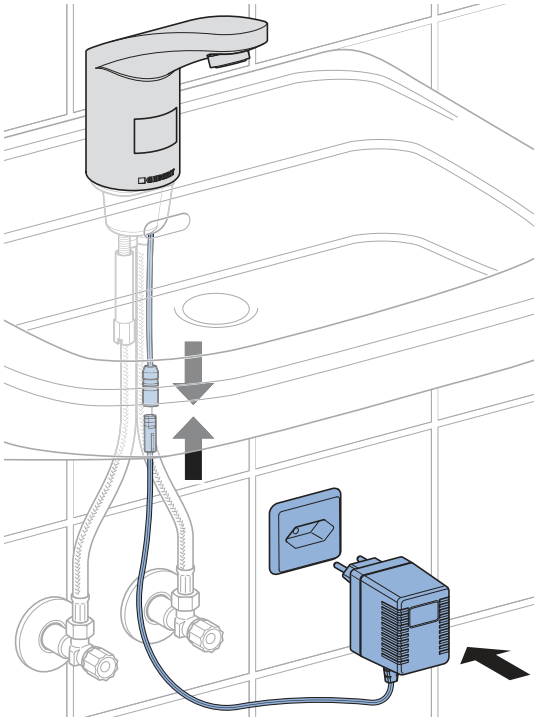

7

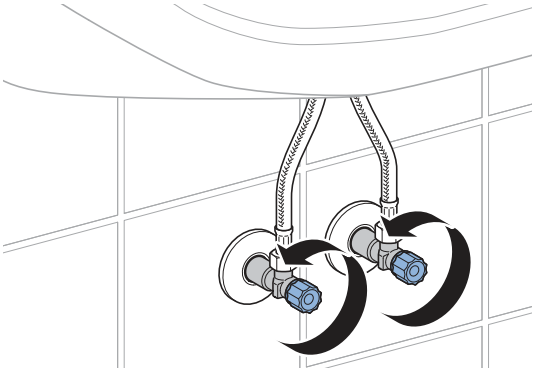

1

1

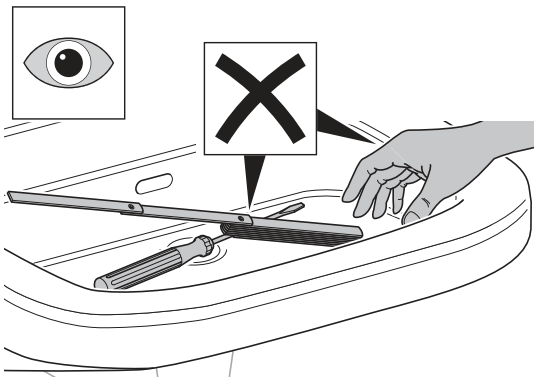

2

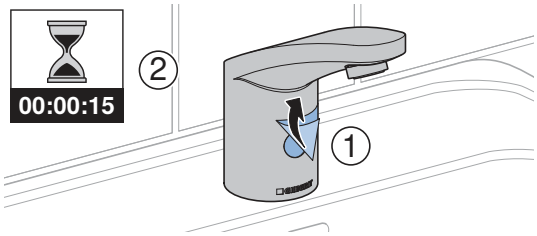

3

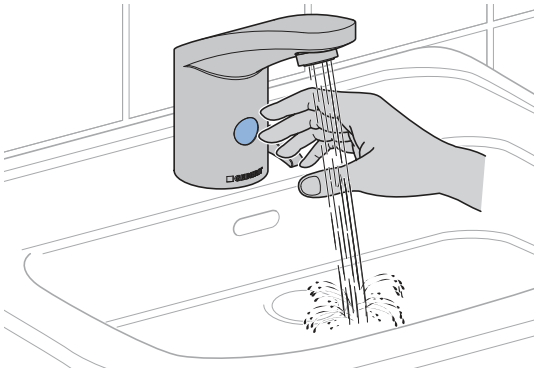

2

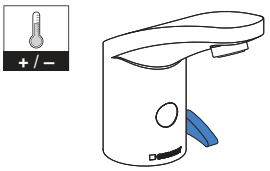

2 A 5

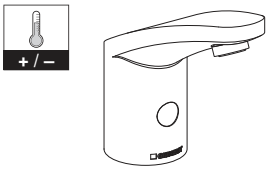

2 B 5

8701475851 © 08-2021
970.651.00.0(00)

2 A

✓

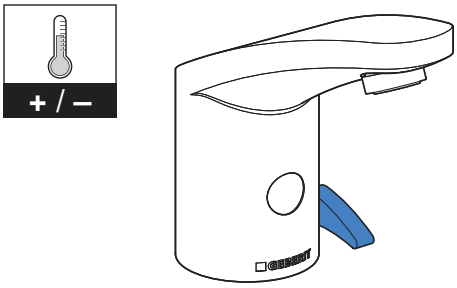

1

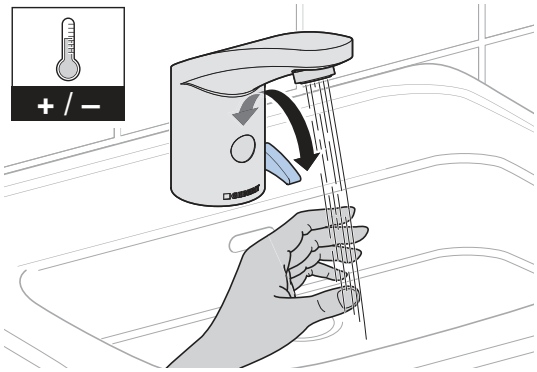

2

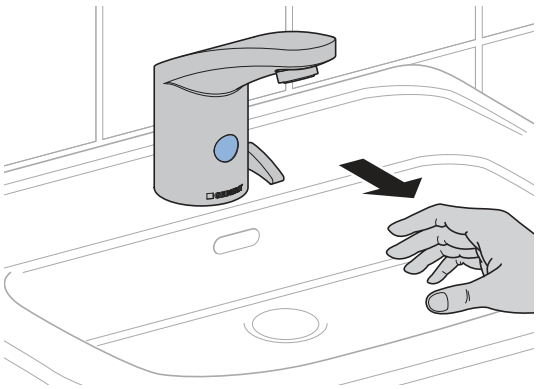

2 B

✓

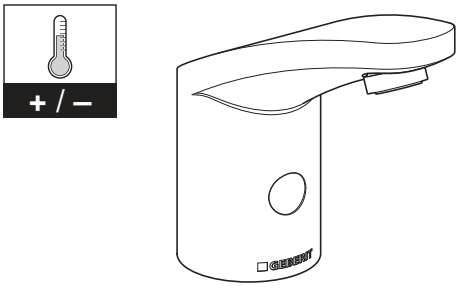

1

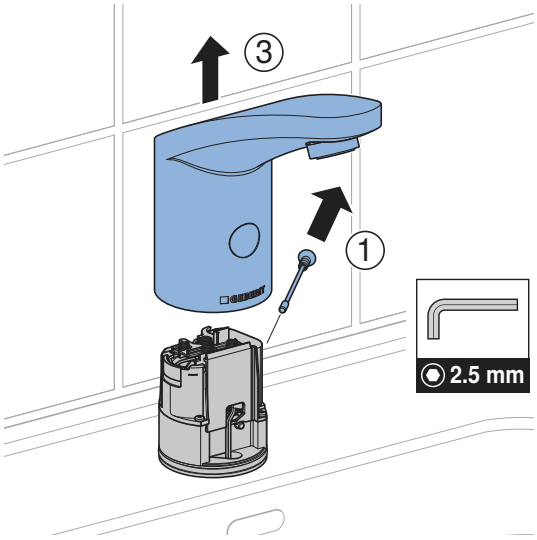

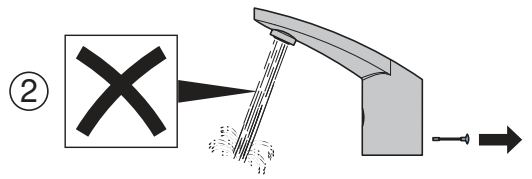

2

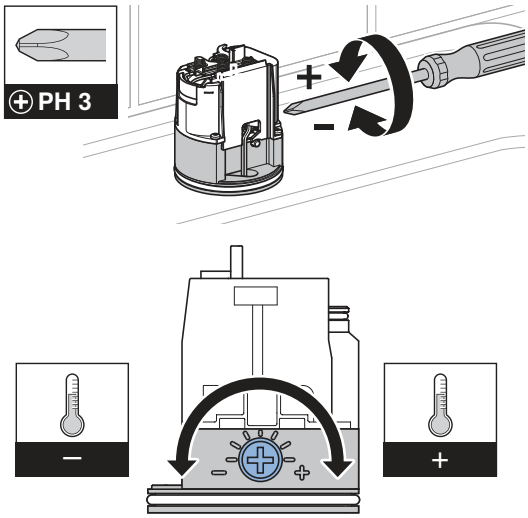

3

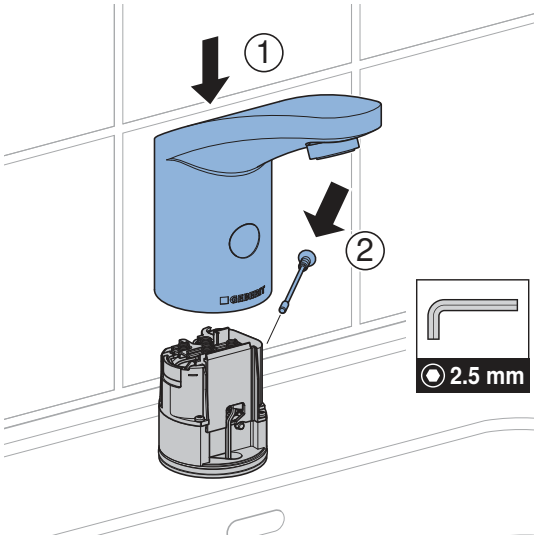

4

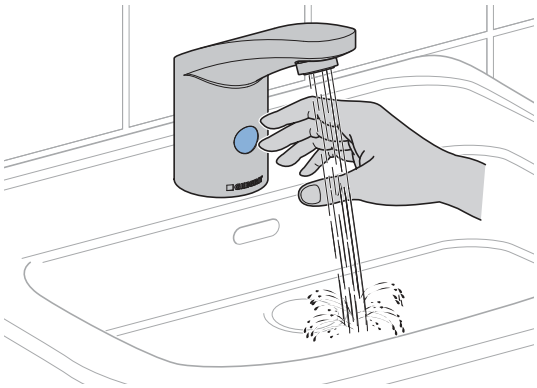

5

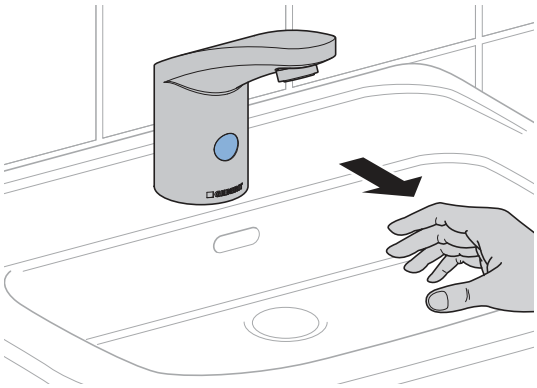

8701475851 © 08-2021
970.651.00.0(00)

▶

Geberit
Apps

https://gbrt.io/dsvFD00

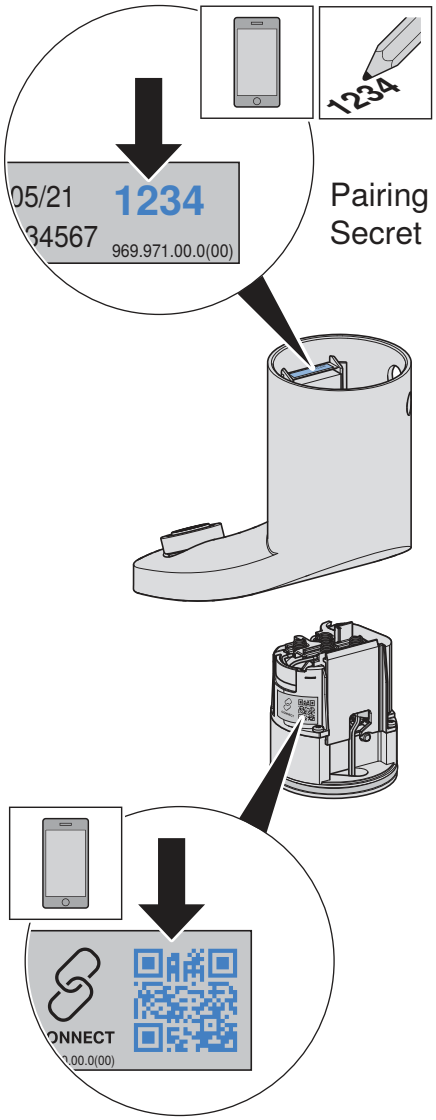

Geberit International AG
Schachenstrasse 77, CH-8645 Jona
documentation@geberit.com
www.geberit.com

8701475851 © 08-2021
970.651.00.0(00)