GEBERIT

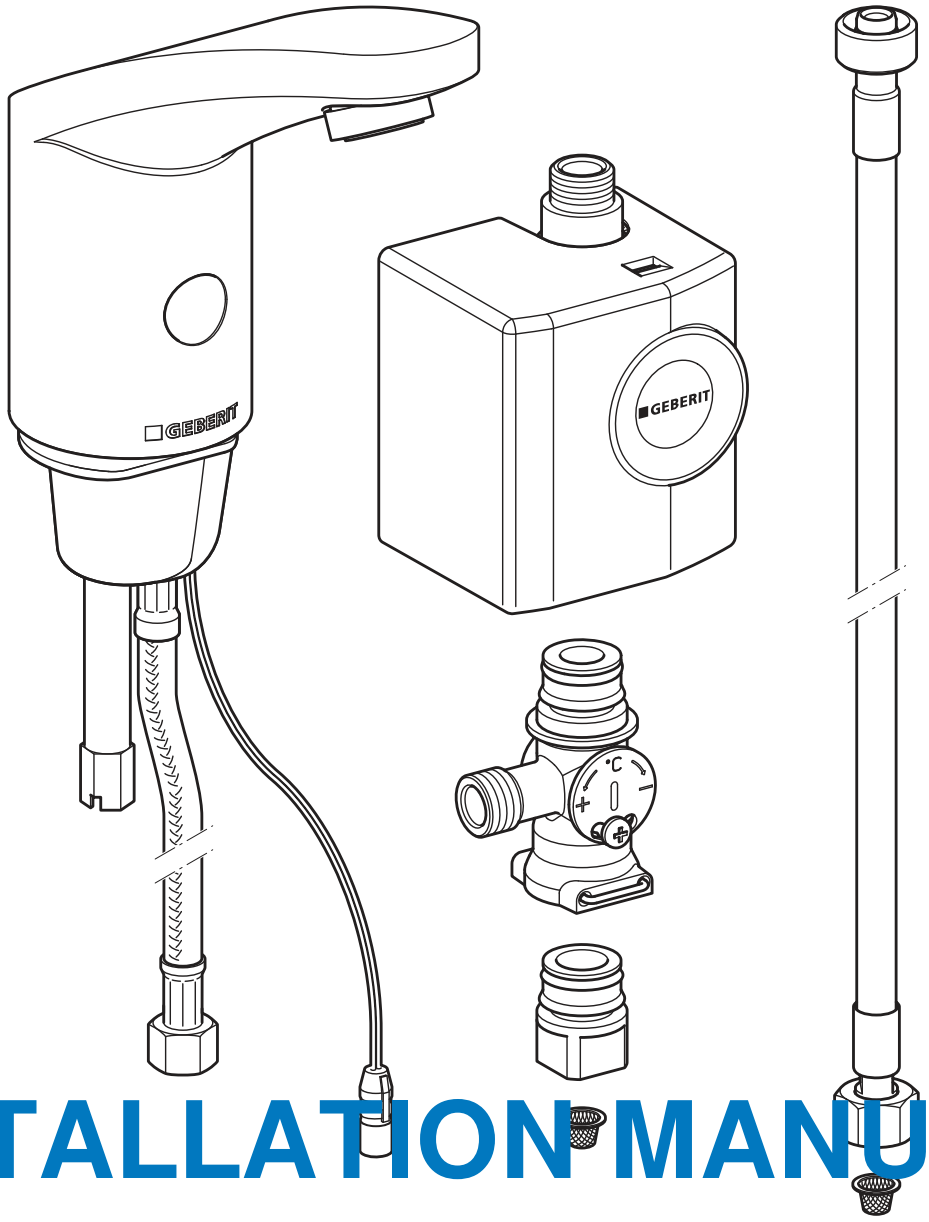

INSTALLATION MANUAL

MONTAGEANLEITUNG
INSTRUCTIONS DE MONTAGE
ISTRUZIONI PER IL MONTAGGIO

KNOW HOW INSTALLED

CONNECT

970.654.00.0(00)

cm

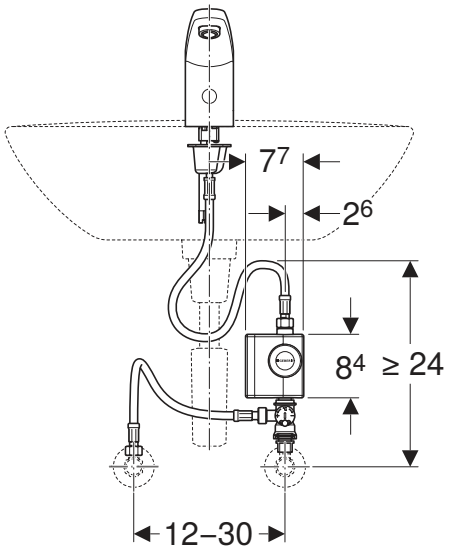

1

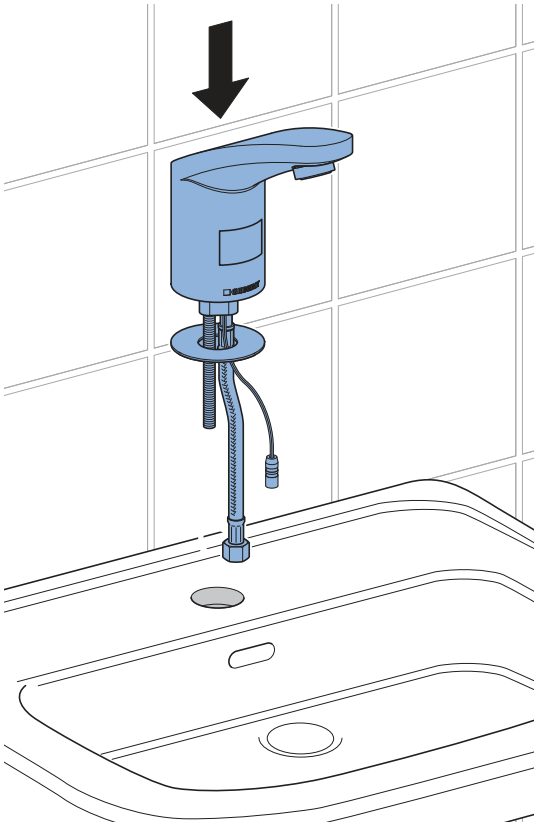

2

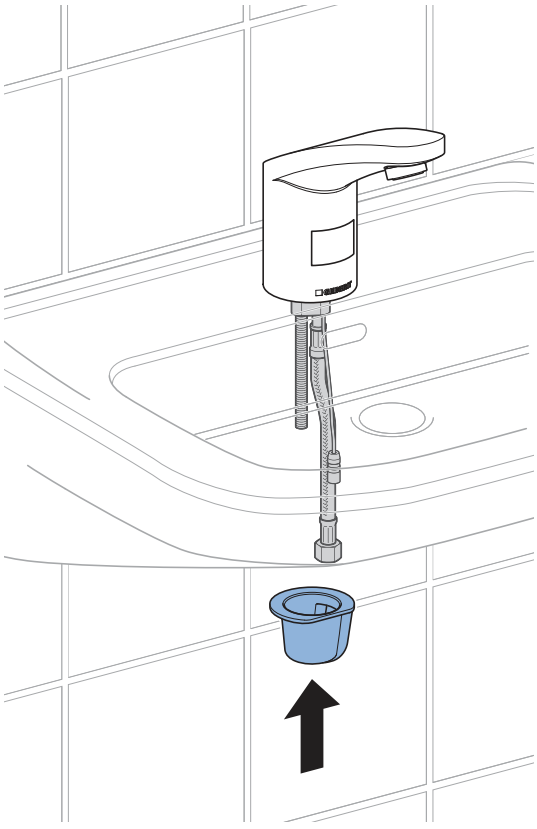

9007208002052363 © 12-2021
970.654.00.0(00)

3

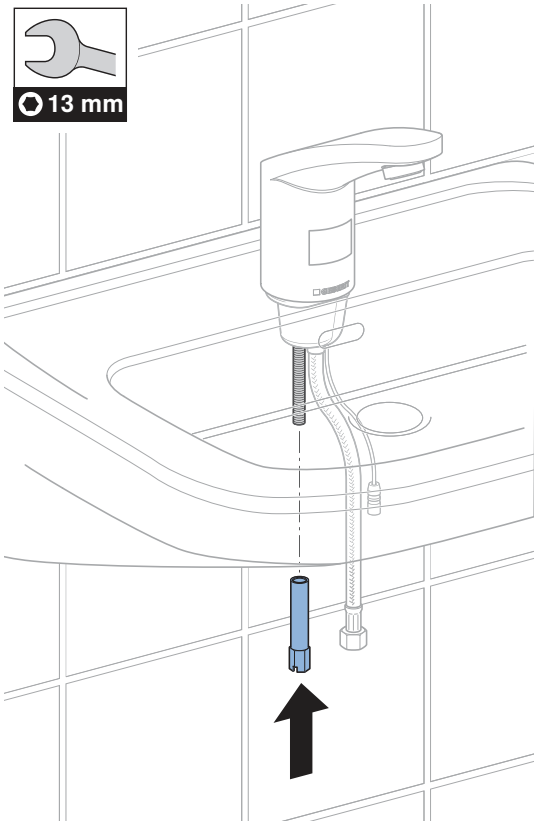

4

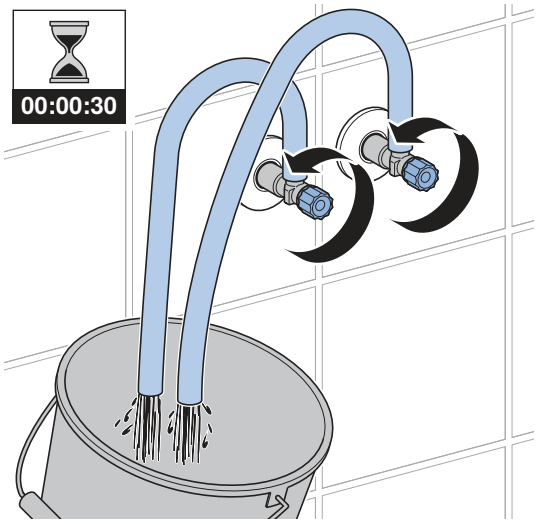

5

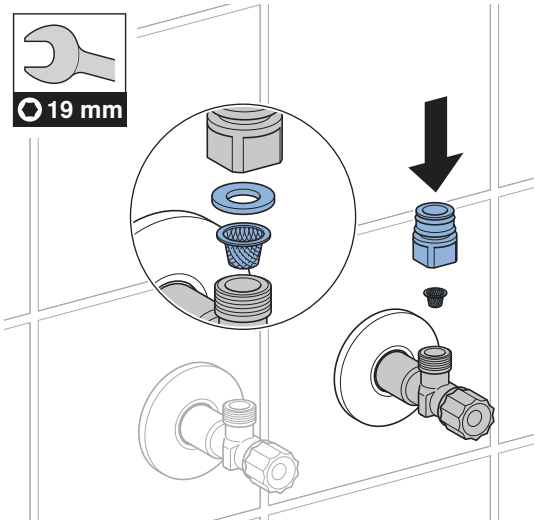

6

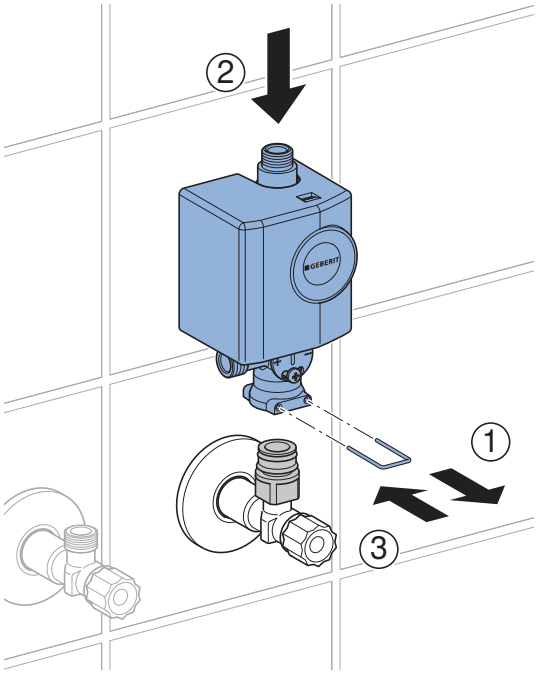

7

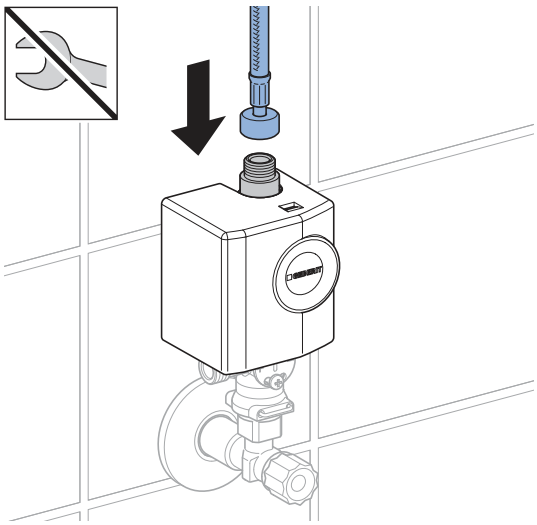

8

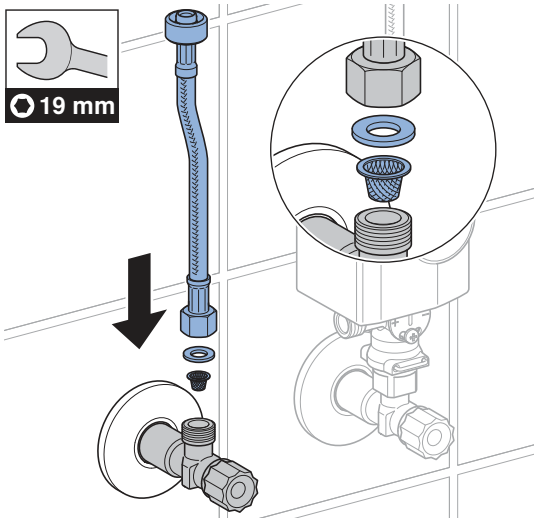

9

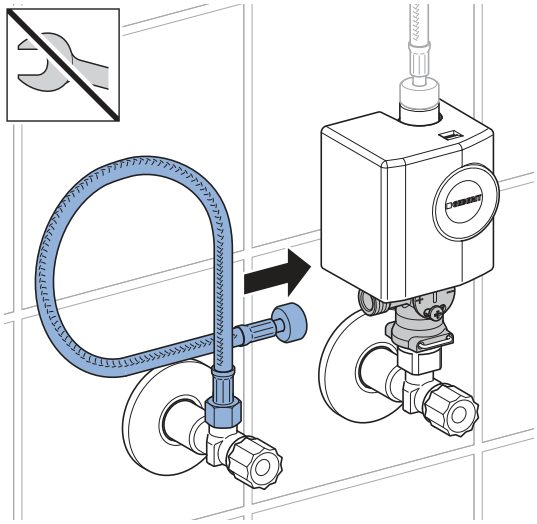

10

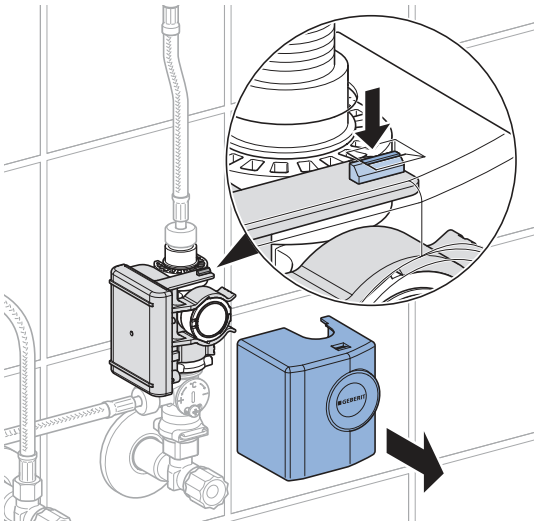

11

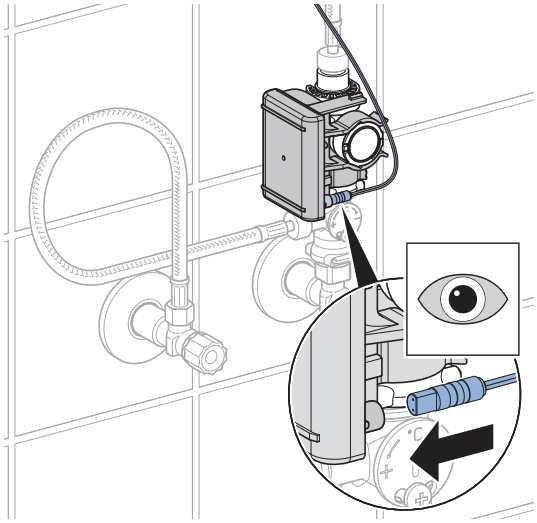

12

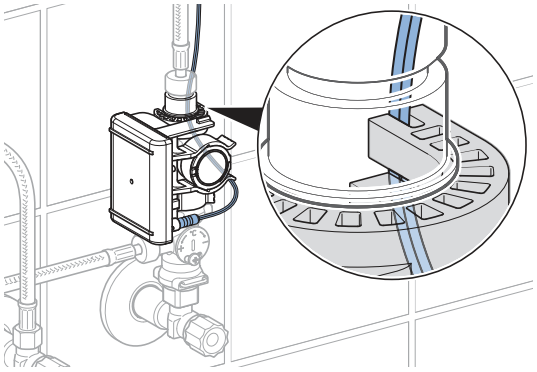

13

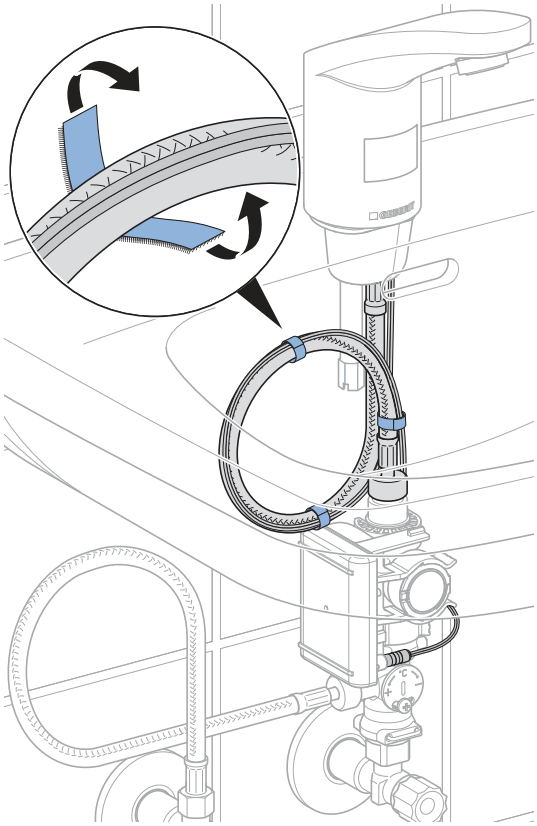

9007208002052363 © 12-2021
970.654.00.0(00)

14

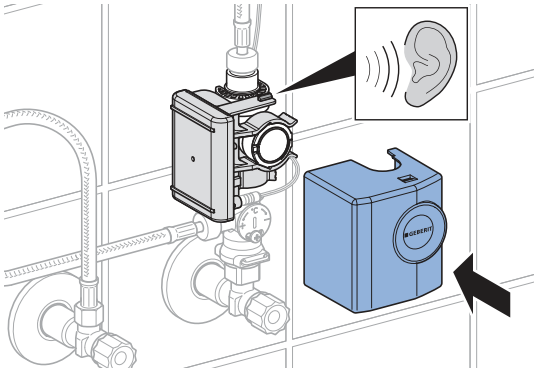

15

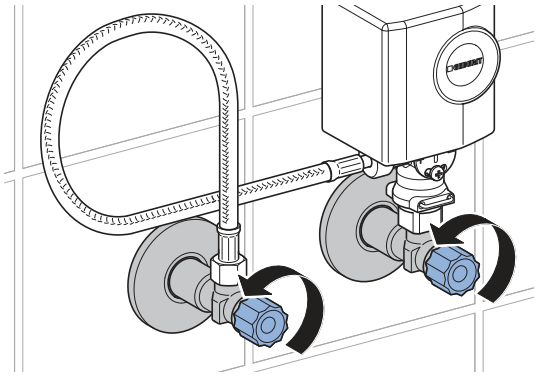



1

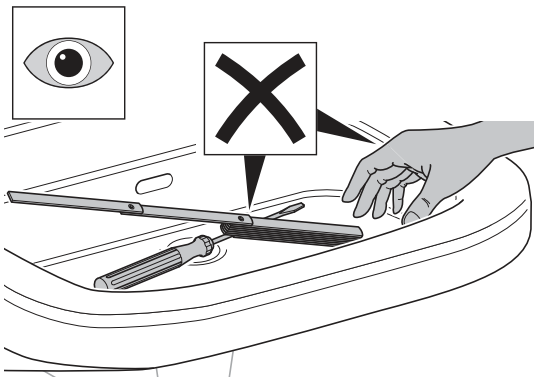

2

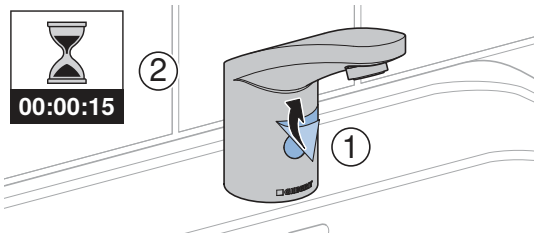

3

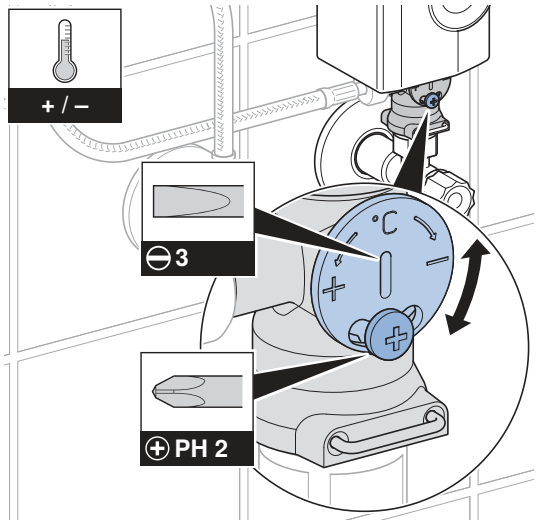

4

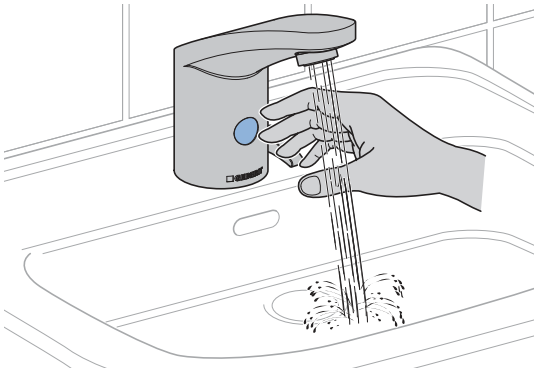

5

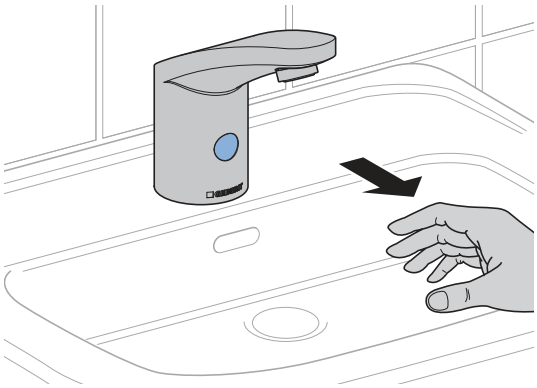

▶

Geberit
Apps

https://gbrt.io/dsvFD00

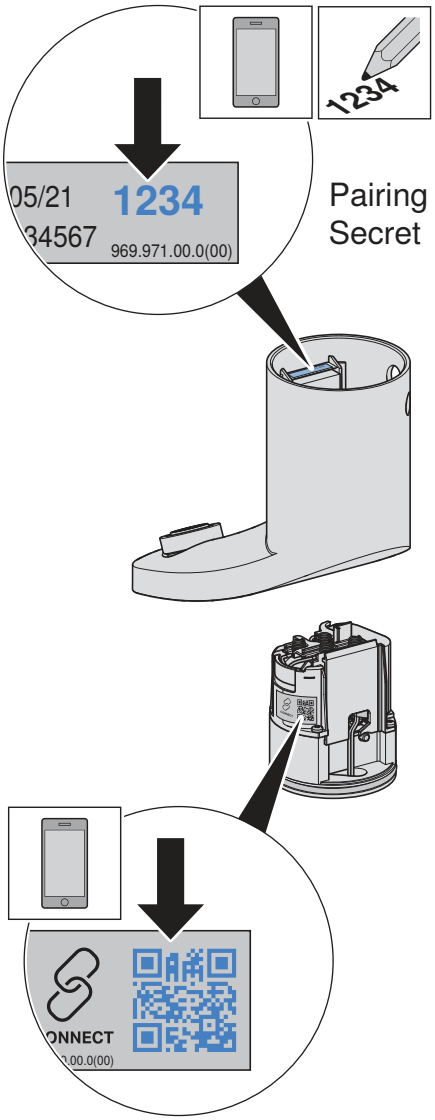

9007208002052363 © 12-2021
970.654.00.0(00)

Geberit International AG
Schachenstrasse 77, CH-8645 Jona
documentation@geberit.com
www.geberit.com

9007208002052363 © 12-2021
970.654.00.0(00)