GEBERIT

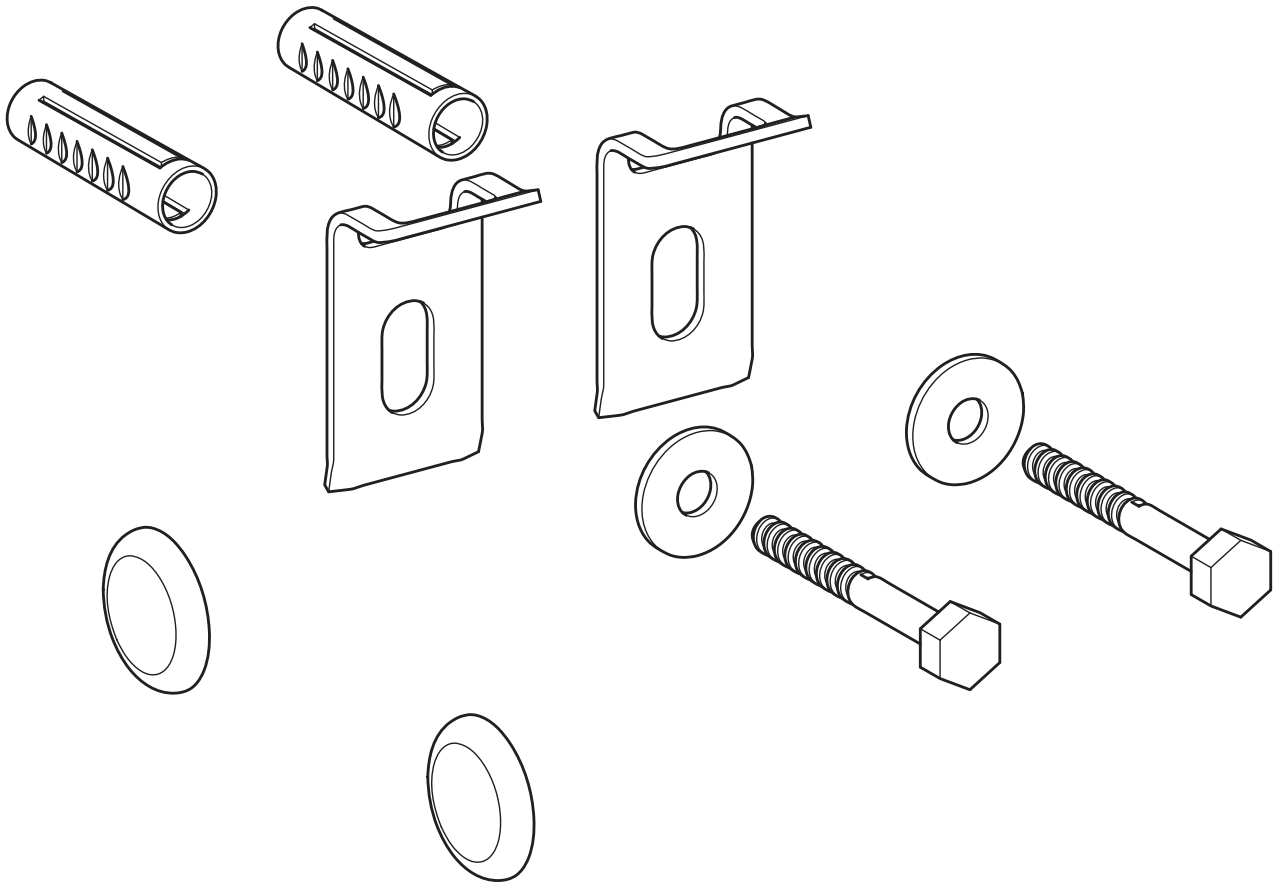

INSTALLATION MANUAL

MONTAGEANLEITUNG
INSTRUCTIONS DE MONTAGE
ISTRUZIONI PER IL MONTAGGIO

KNOW HOW INSTALLED

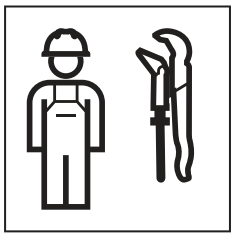

968.612.00.0(01)

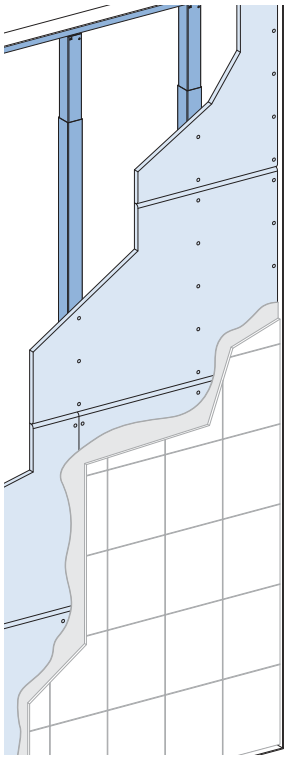

1 A 2

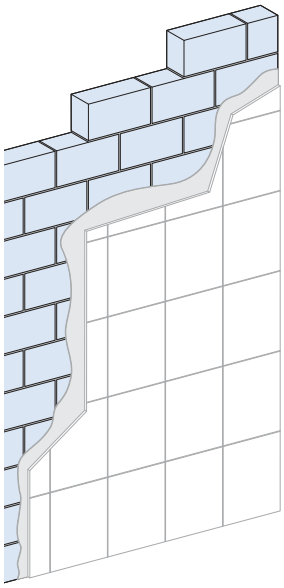

1 B 3

A

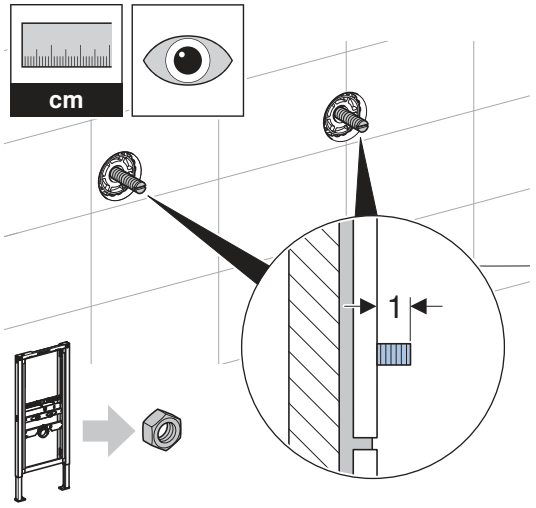

1

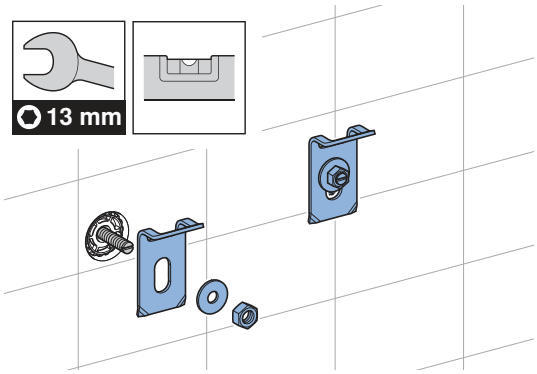

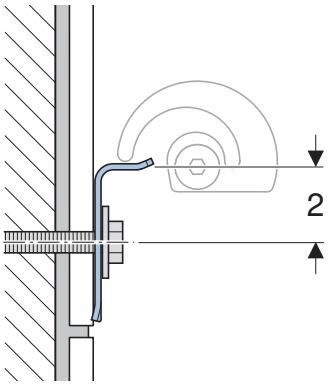

36028799904332299 © 09-2021
968.612.00.0(01)

2

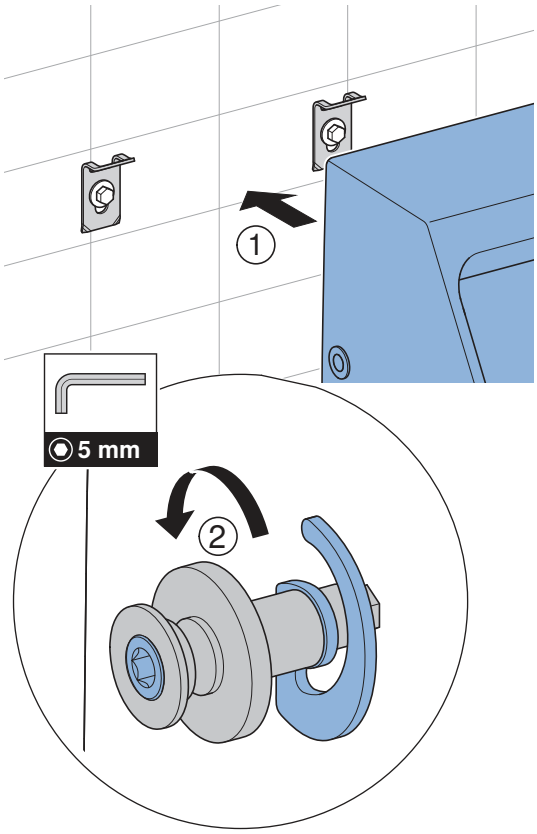

3

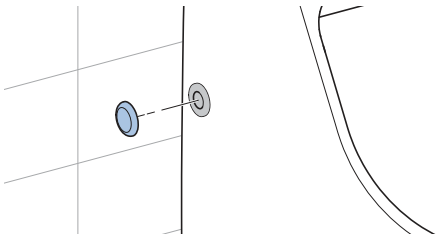

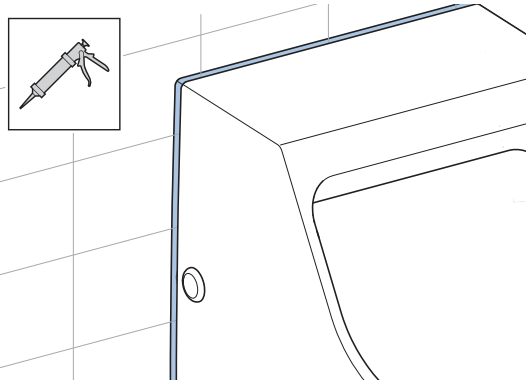

B

1

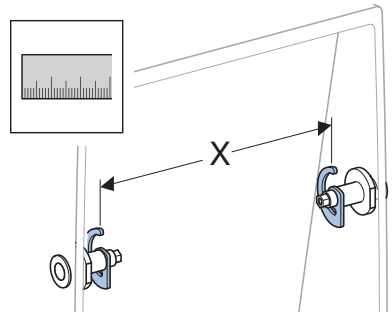

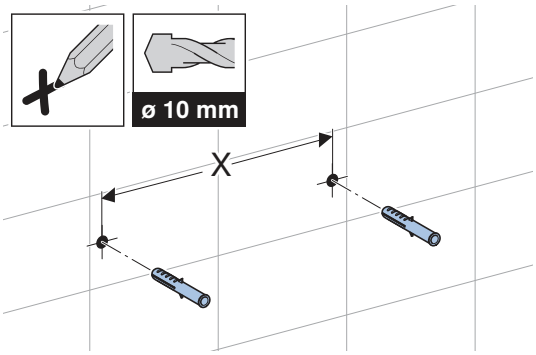

2

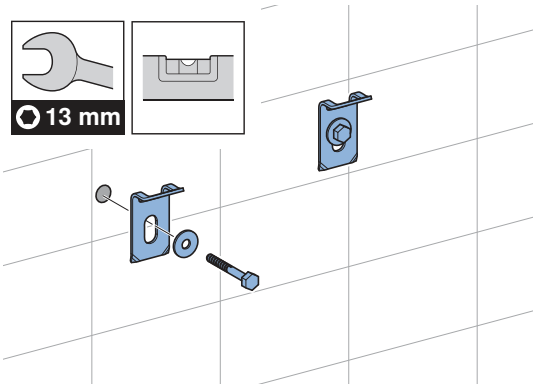

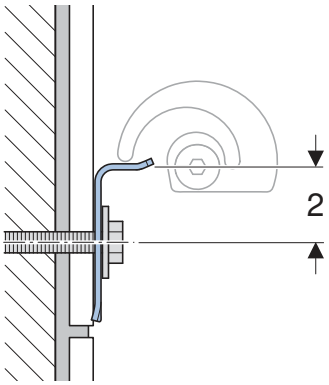

3

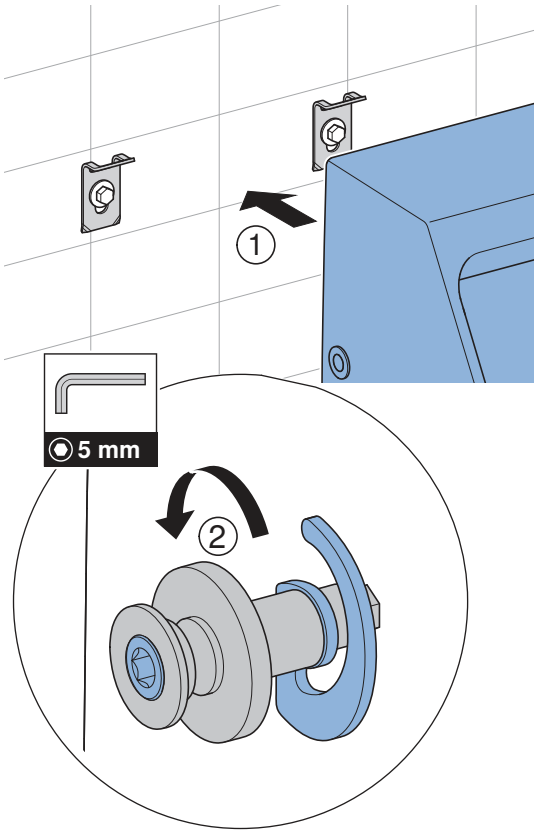

4

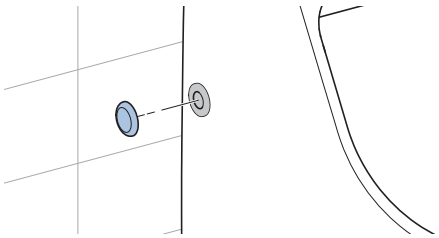

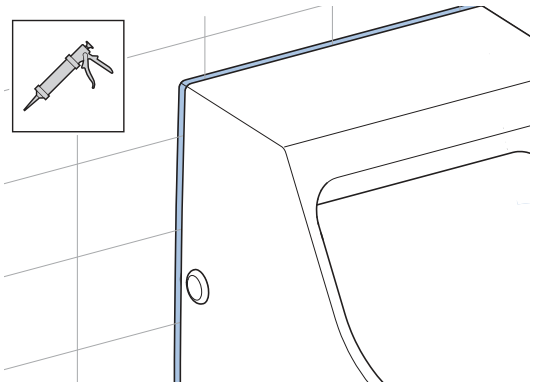

Geberit International AG
Schachenstrasse 77, CH-8645 Jona
documentation@geberit.com
www.geberit.com

360287999043322299 © 09-2021
968.612.00.0(01)