GEBERIT



INSTALLATION MANUAL

MONTAGEANLEITUNG
INSTRUCTIONS DE MONTAGE
ISTRUZIONI PER IL MONTAGGIO

KNOW HOW INSTALLED

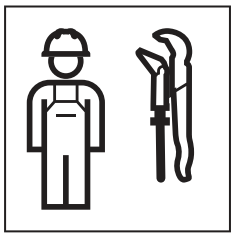

968.866.00.0(01)

1

▶

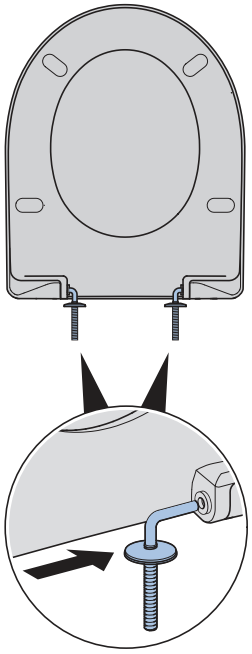

2

1

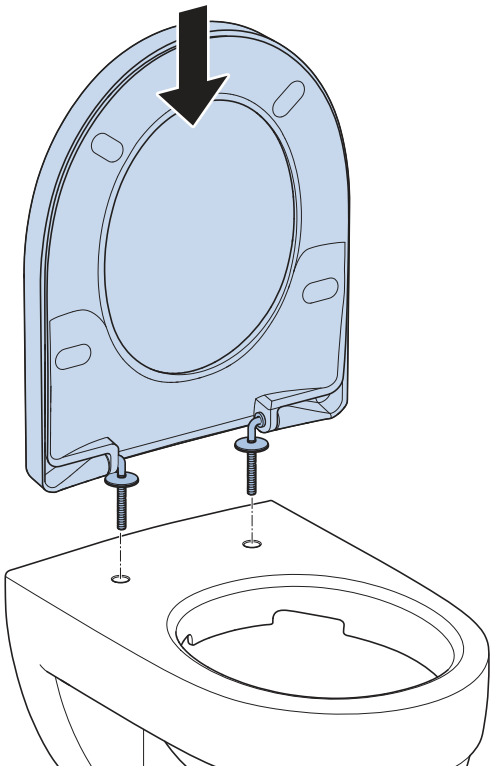

27021601945174027 © 10-2023
968.866.00.0(01)

2

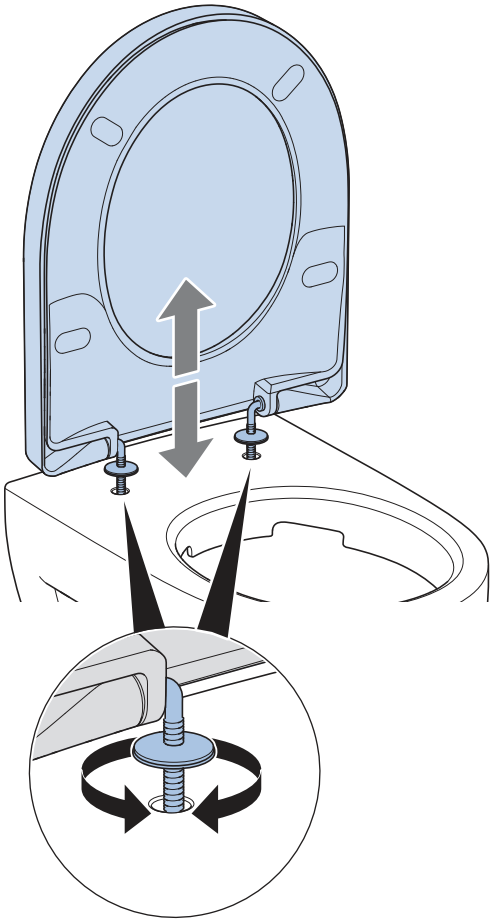

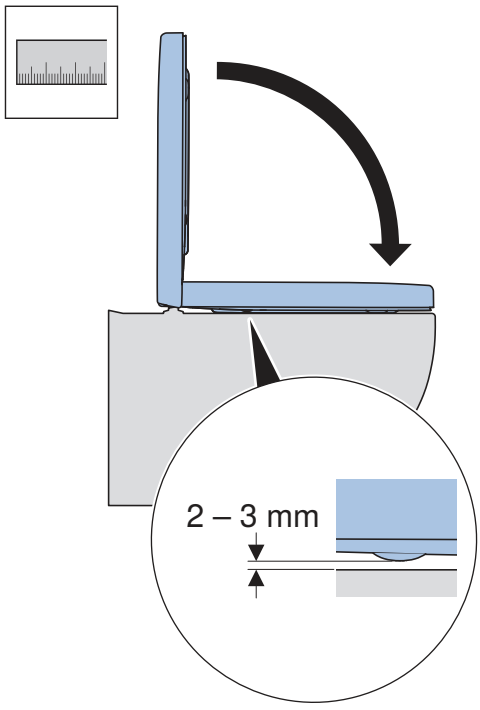

3

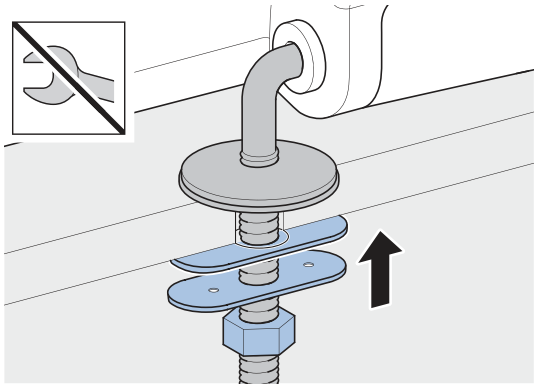

3

1

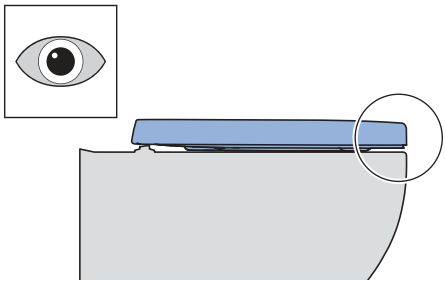

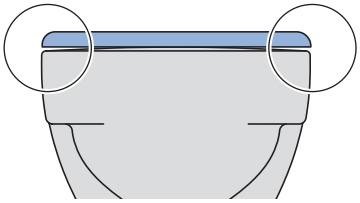

2



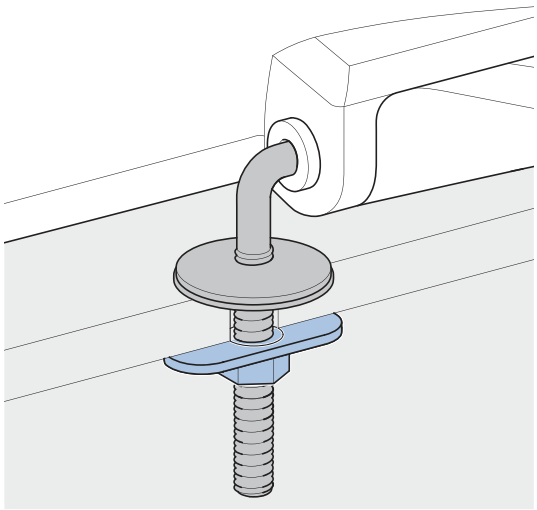

Geberit International AG
Schachenstrasse 77, CH-8645 Jona
documentation@geberit.com
www.geberit.com

270216019451740 27 © 10-2023
968.866.00.0(01)