GEBERIT

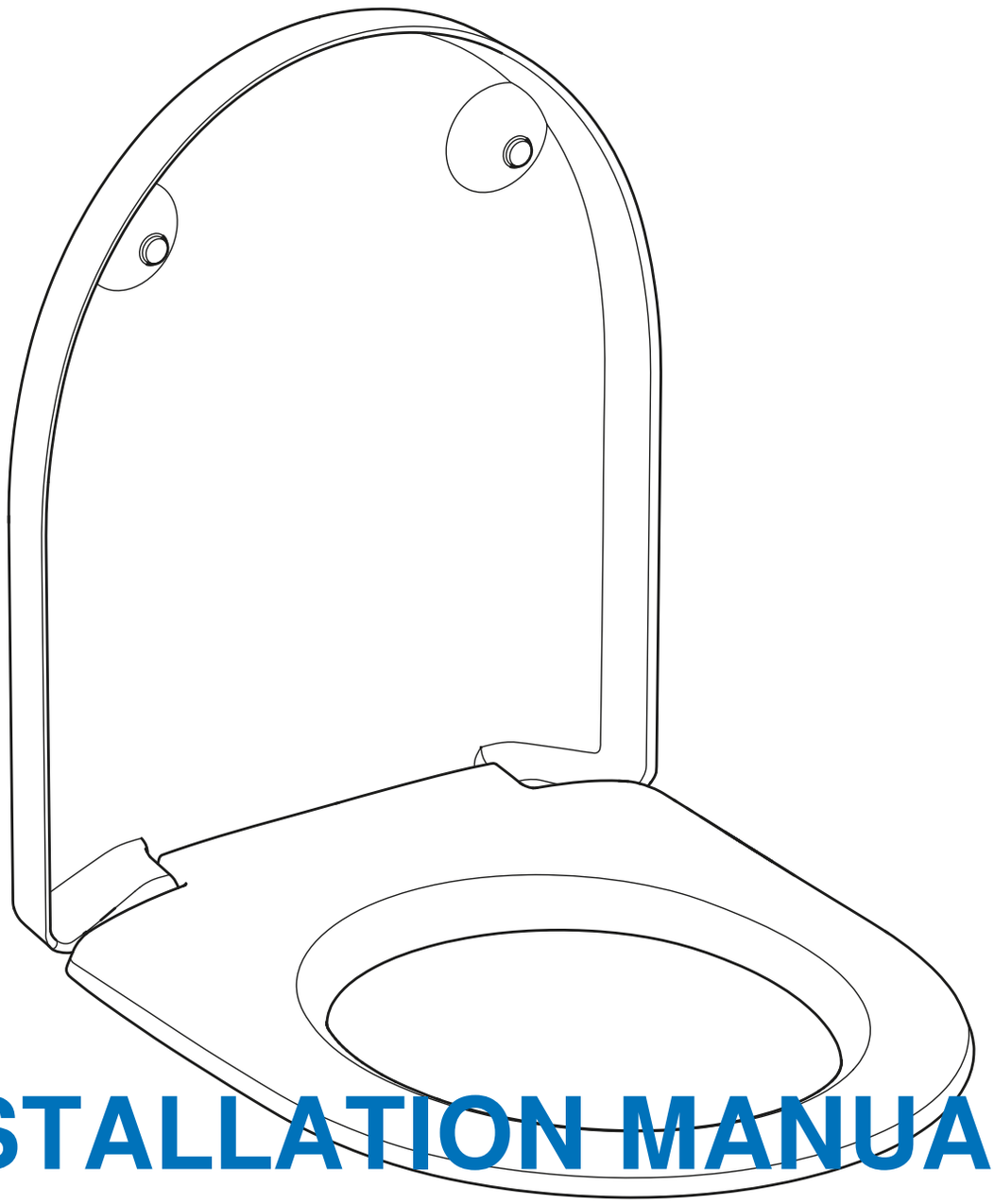

INSTALLATION MANUAL

MONTAGEANLEITUNG
INSTRUCTIONS DE MONTAGE
ISTRUZIONI PER IL MONTAGGIO

KNOW HOW INSTALLED

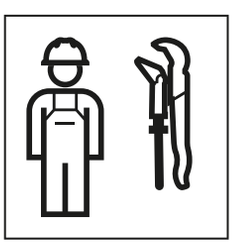

1

1

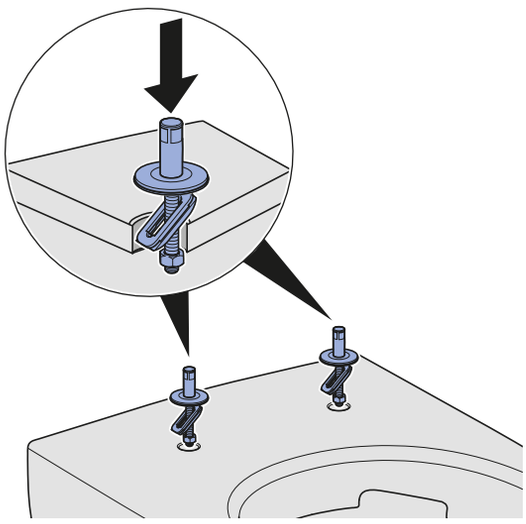

2

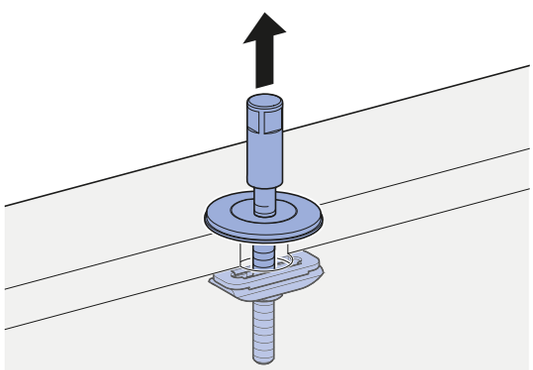

3

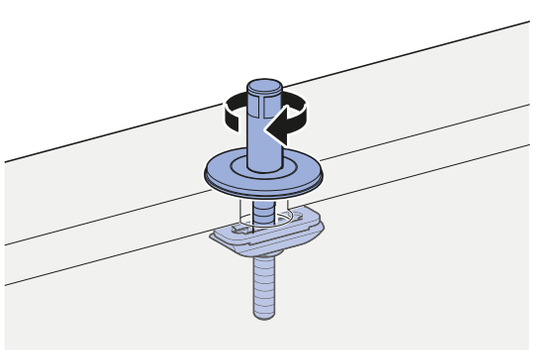

4

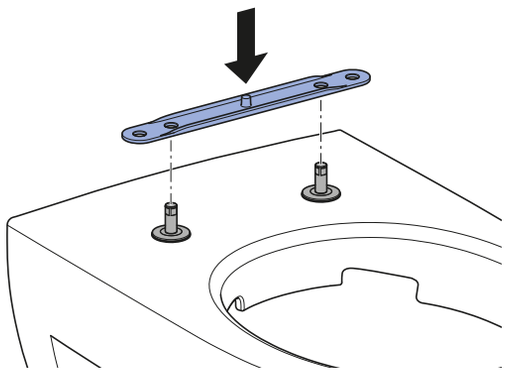

5

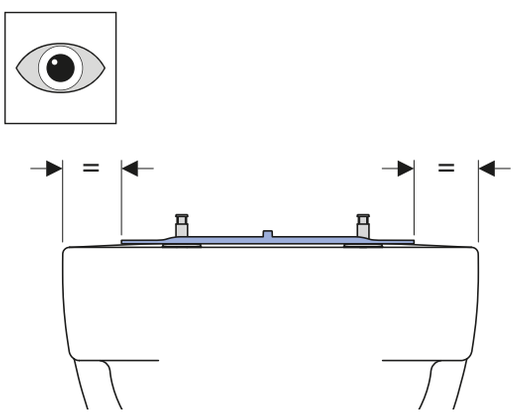

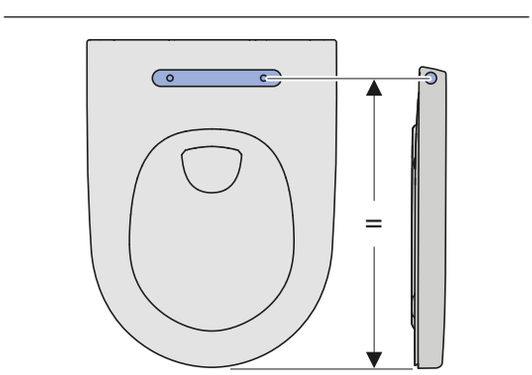

6

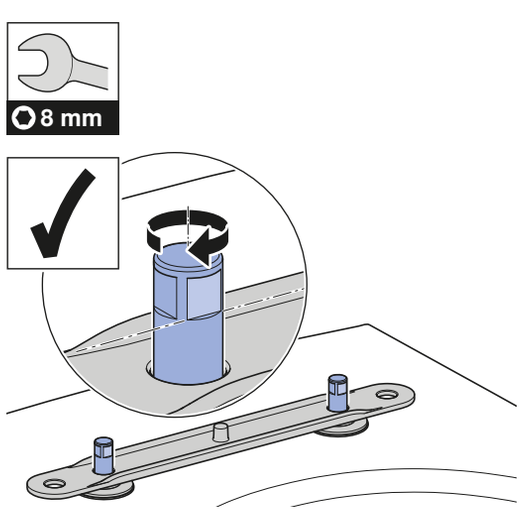

27021600800310667 © 09-2018
967.682.00.0 (03)

7

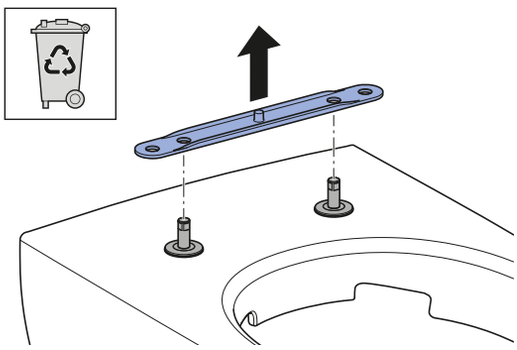

2

1

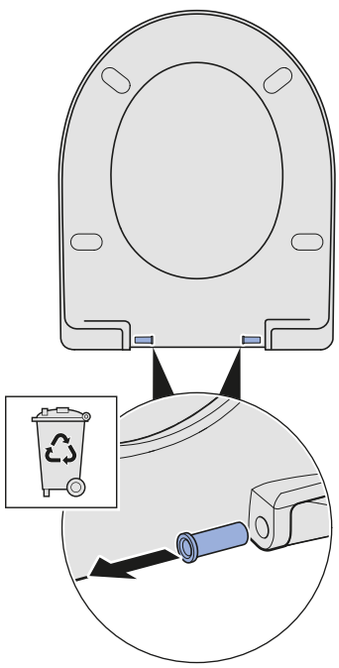

2

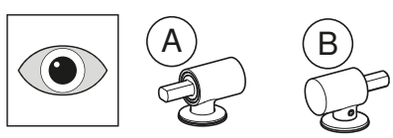

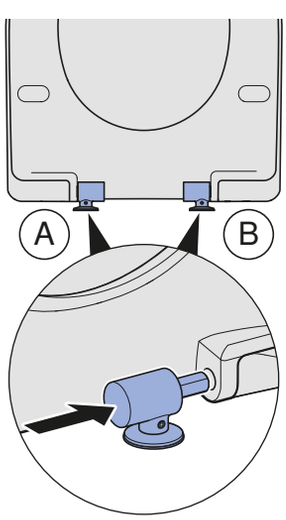

3

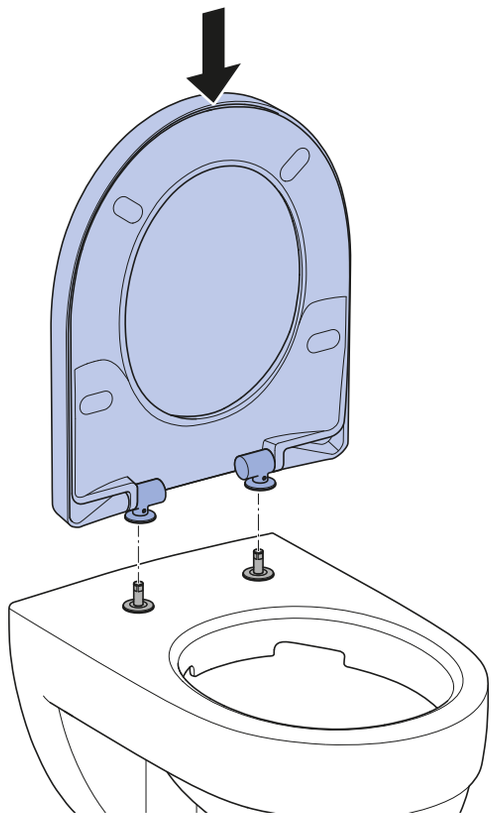

27021600800310667 © 09-2018
967.682.00.0 (03)

1

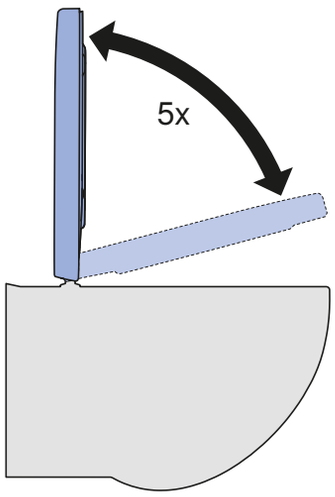

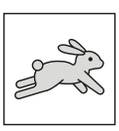
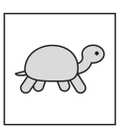

→ 2 6



→ 3 8

2

1

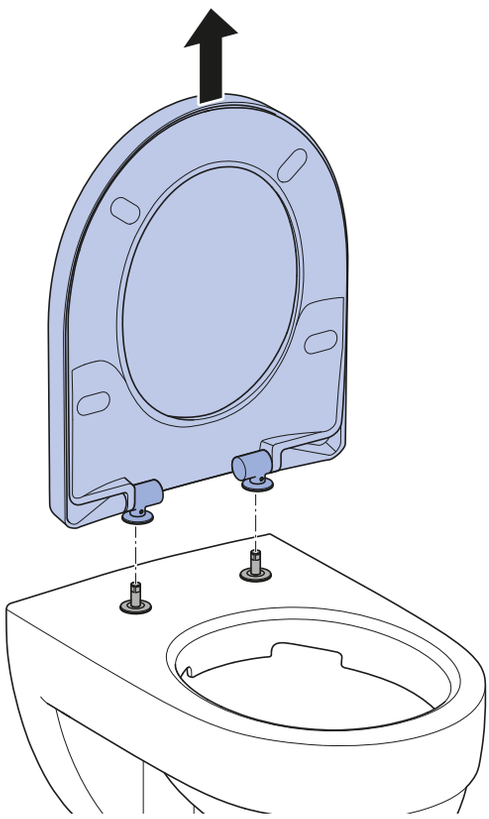

2

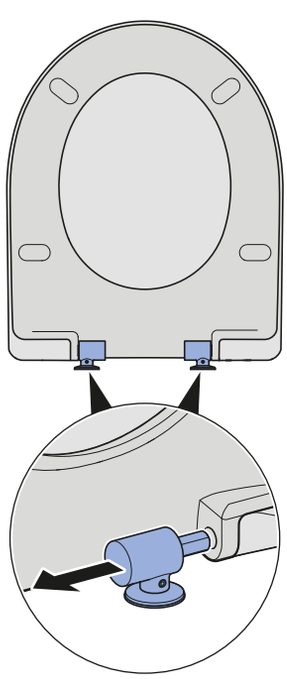

3

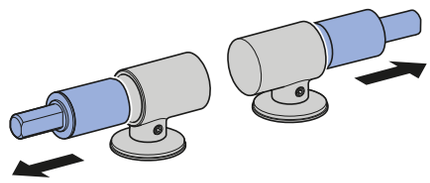

4

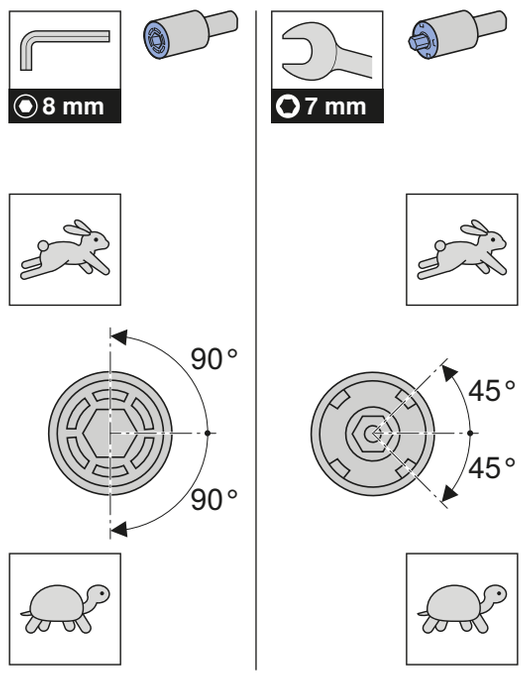

5

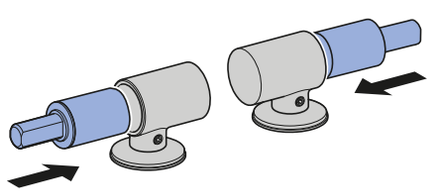

27021600800310667 © 09-2018
967.682.00.0 (03)

6

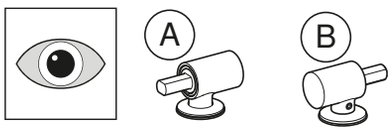

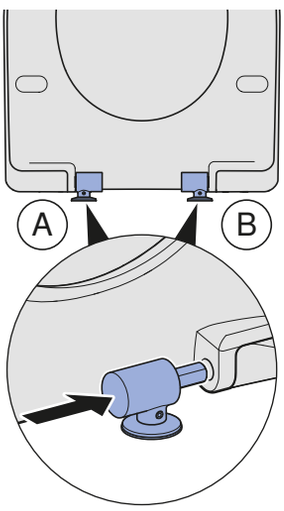

7

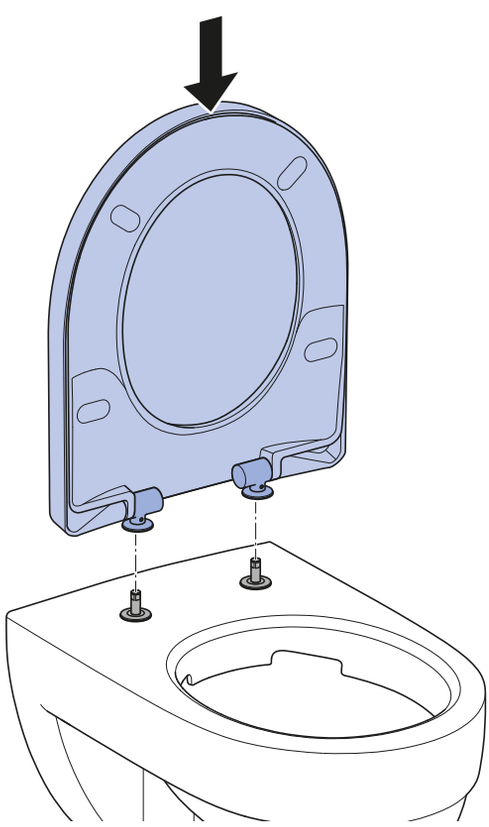

8

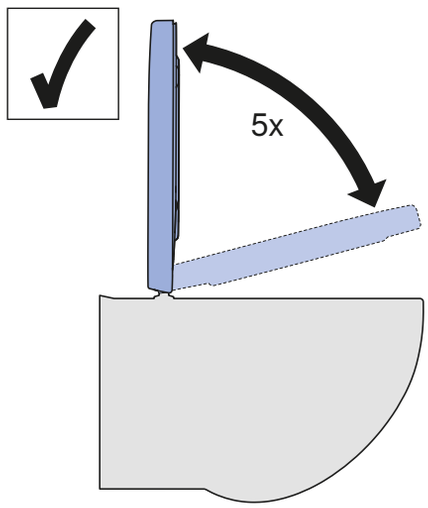

3 8

3

▶

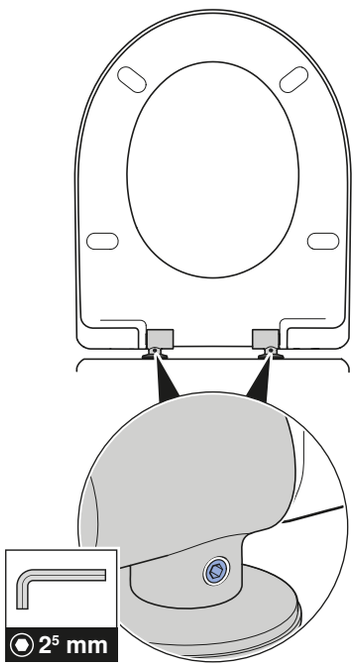

Geberit International AG
Schachenstrasse 77, CH-8645 Jona
documentation@geberit.com
www.geberit.com

27021600800310667 © 09-2018
967.682.00.0 (03)