GEBERIT



INSTALLATION MANUAL

MONTAGEANLEITUNG
INSTRUCTIONS DE MONTAGE
ISTRUZIONI PER IL MONTAGGIO

KNOW HOW INSTALLED

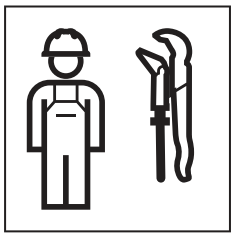

968.622.00.0(02)

1

▶

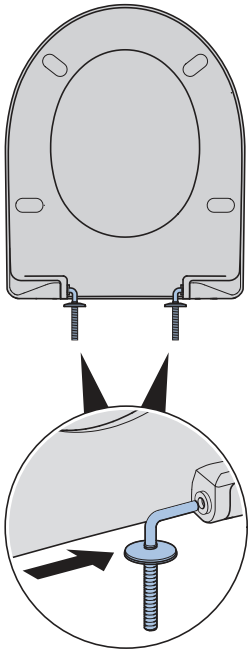

2

1

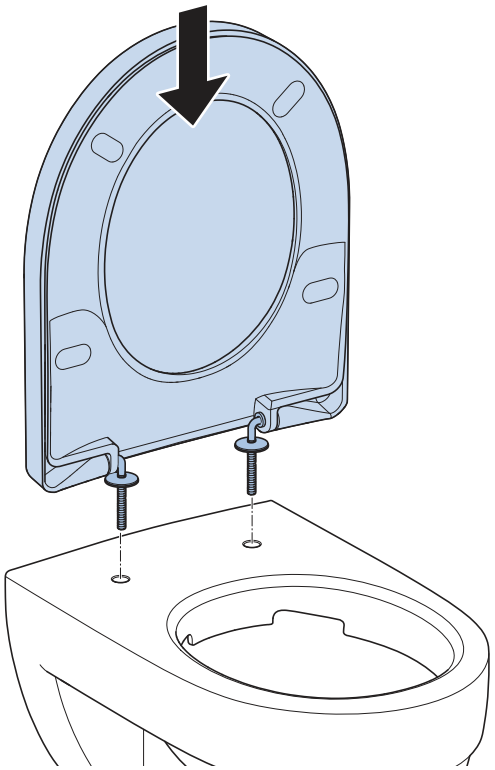

18014402966284043 © 10-2023
968.622.00.0(02)

2

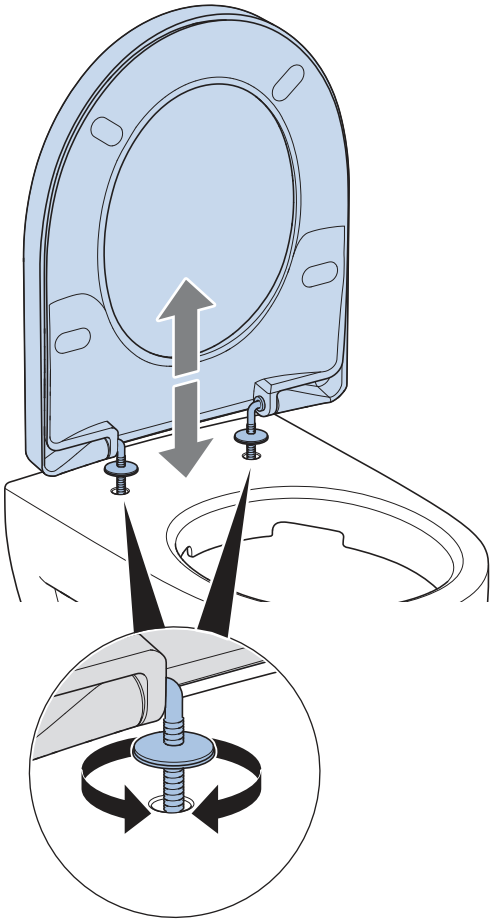

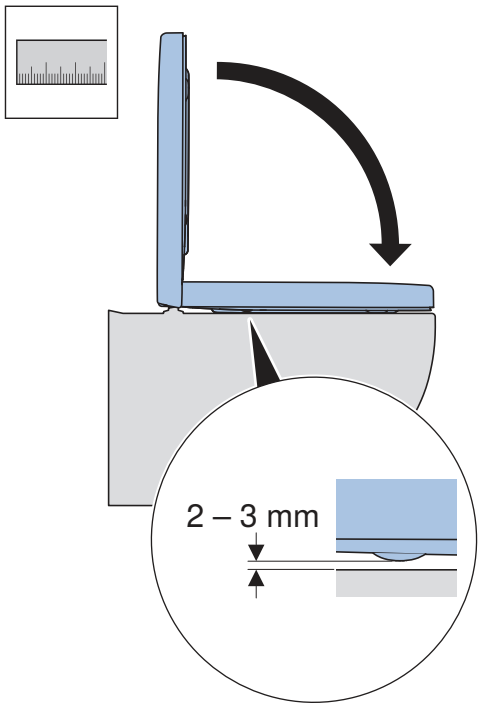

3

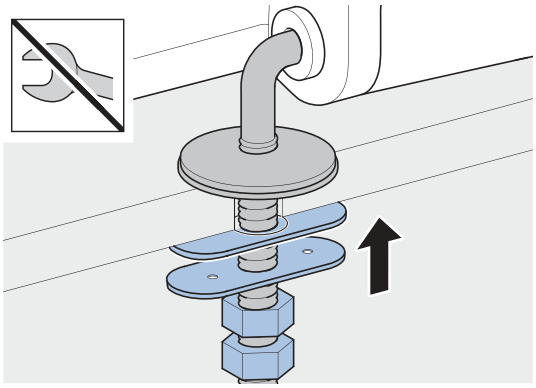

3

1

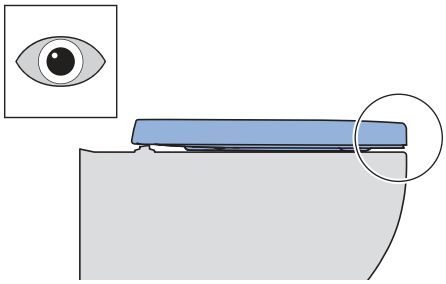

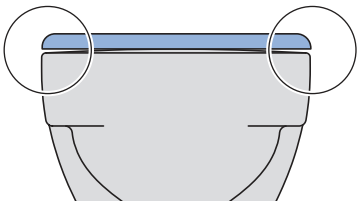

2



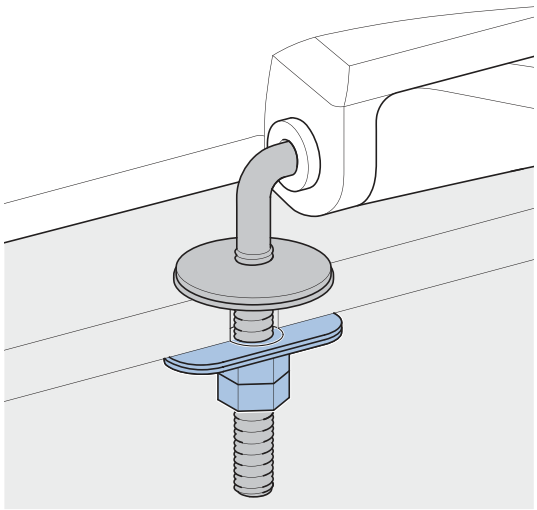

Geberit International AG
Schachenstrasse 77, CH-8645 Jona
documentation@geberit.com
www.geberit.com

18014402966284043 © 10-2023
968.622.00.0(02)