GEBERIT

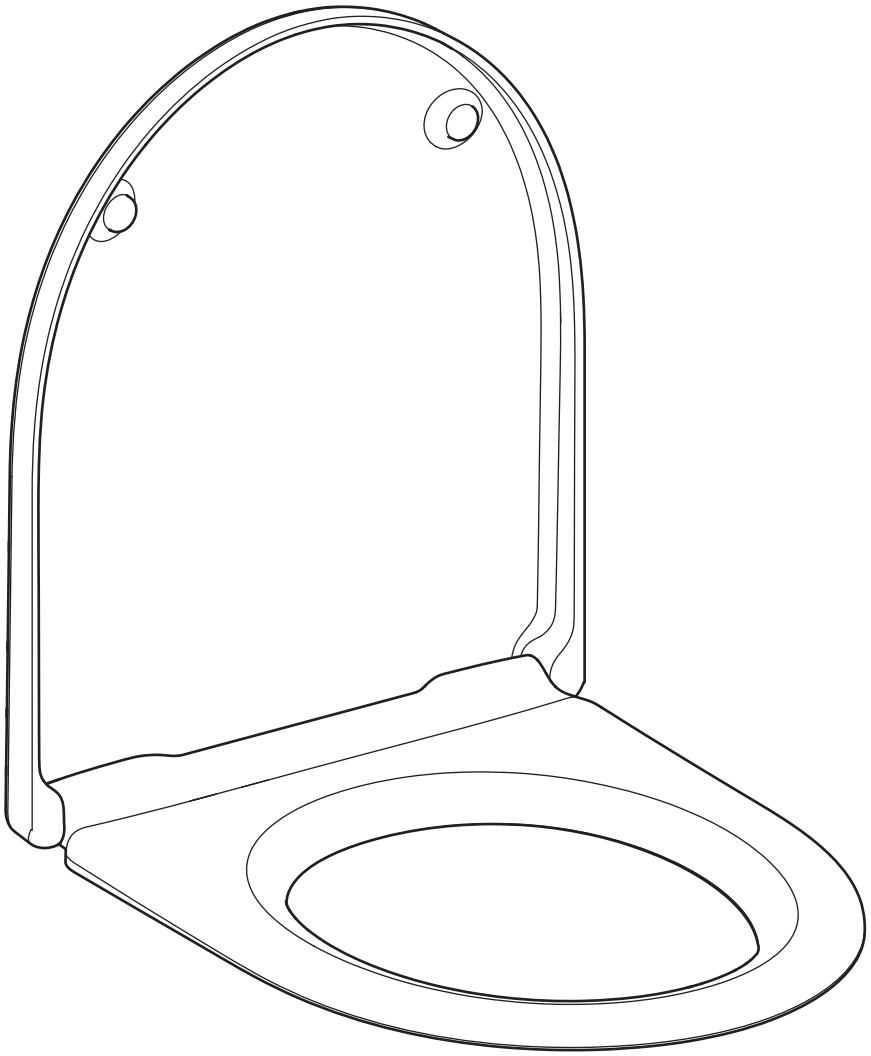

INSTALLATION MANUAL

MONTAGEANLEITUNG
INSTRUCTIONS DE MONTAGE
ISTRUZIONI PER IL MONTAGGIO

KNOW HOW INSTALLED

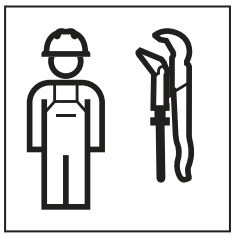

972.636.00.0(01)



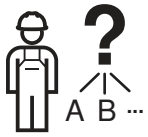



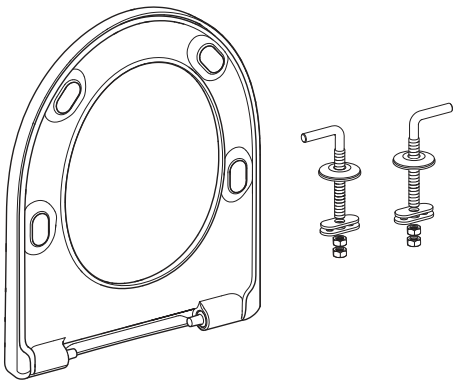

→ 1 3



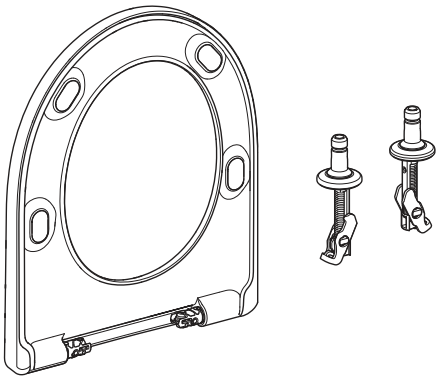

→ 2 5



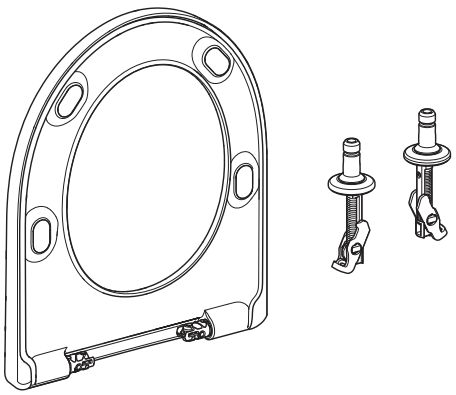

→ 4 8

16694996235 © 03-2026
972.636.00.0(01)

1

1

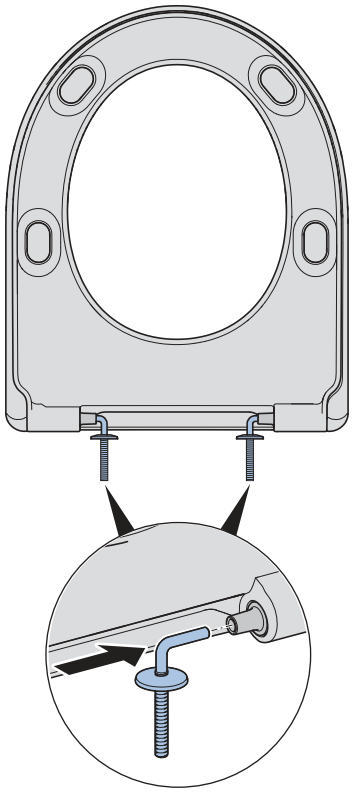

2

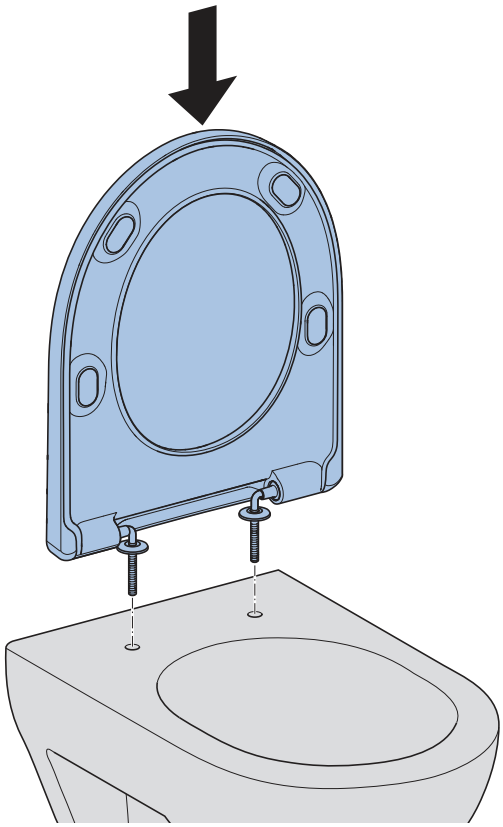

3

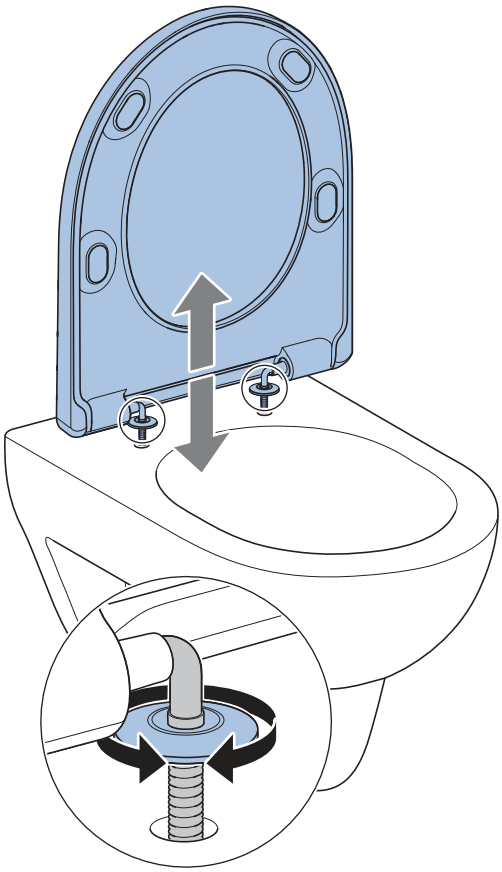

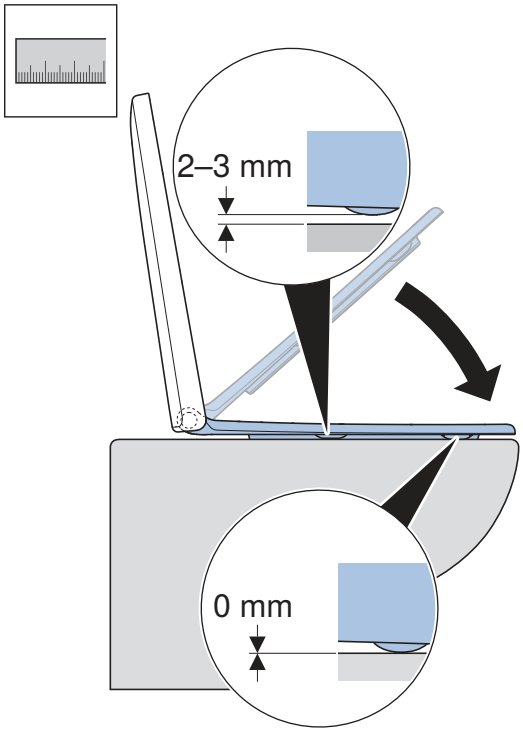

4

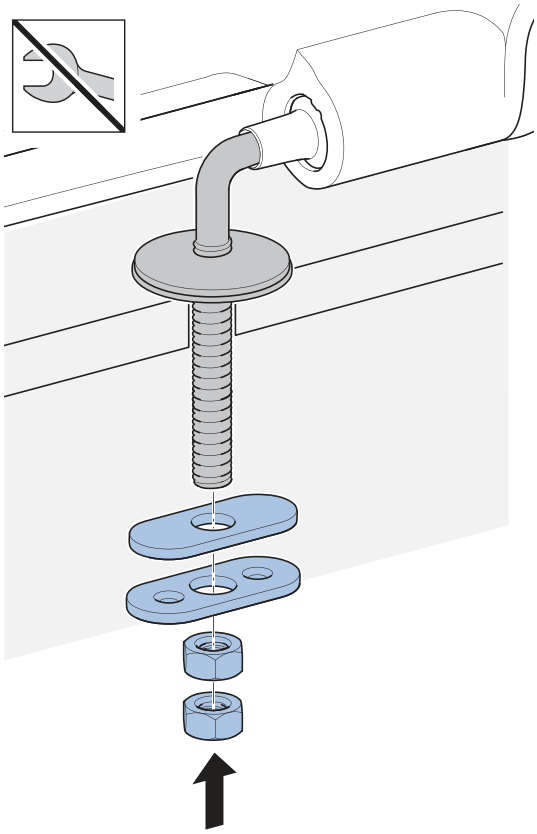

5

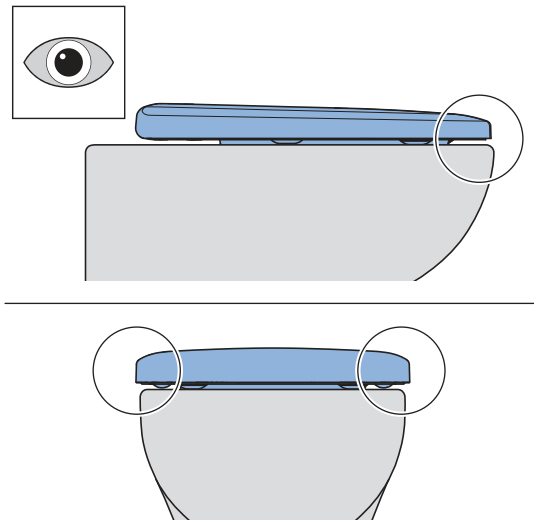

6

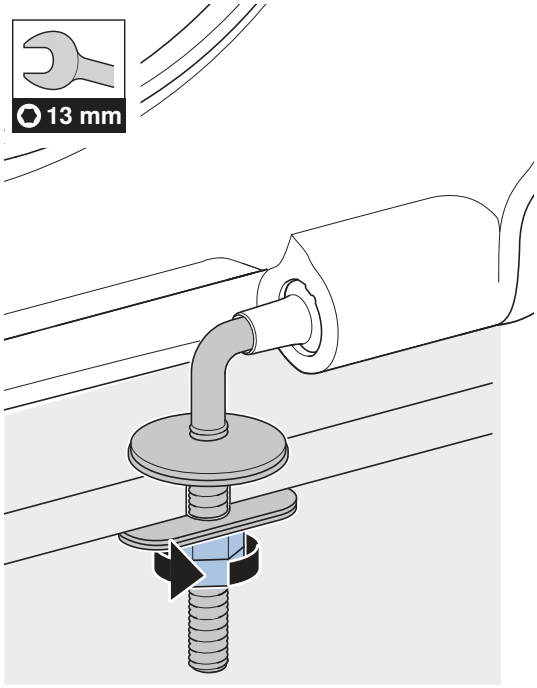

16694996235 © 03-2026

2

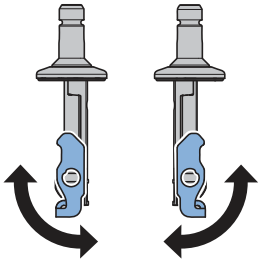

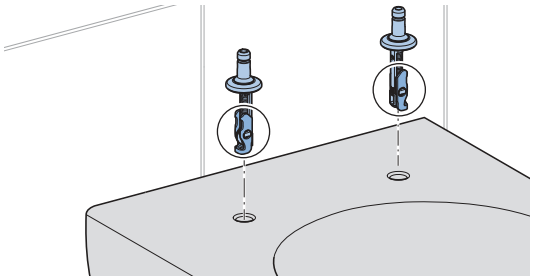

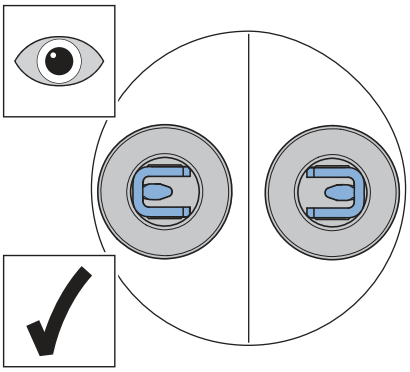

1

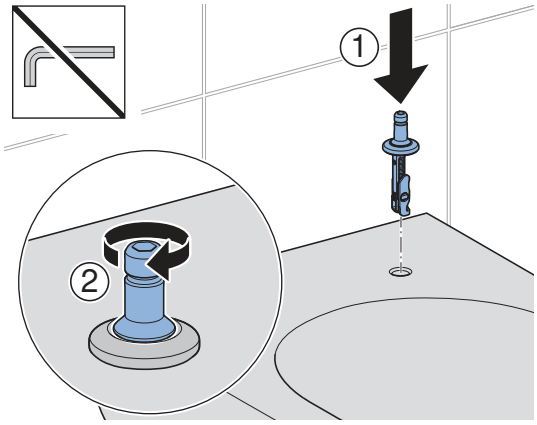

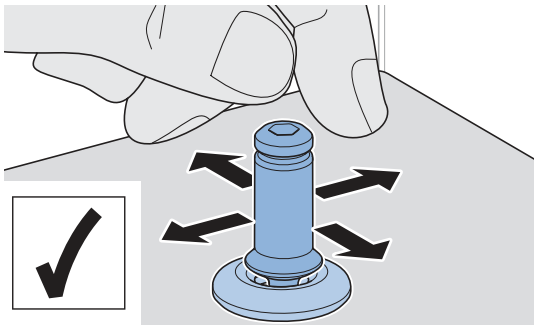

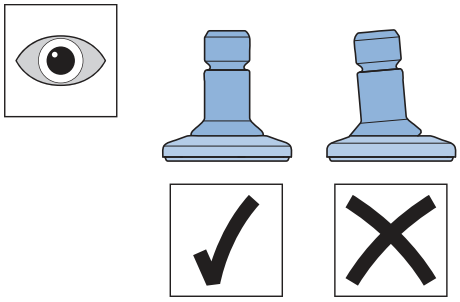

2

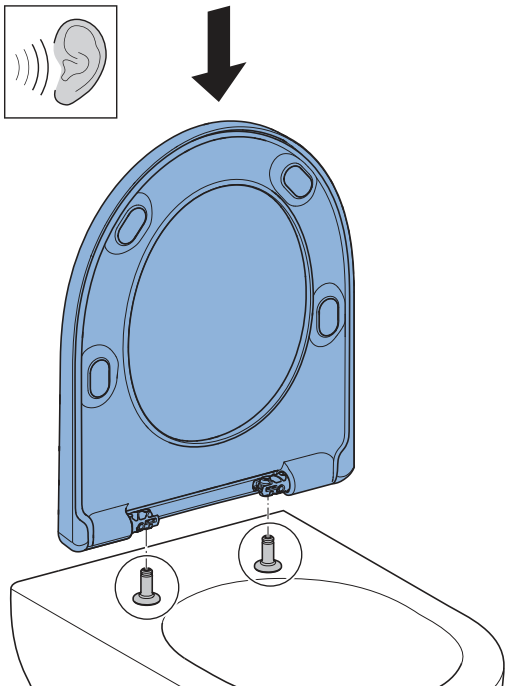

3

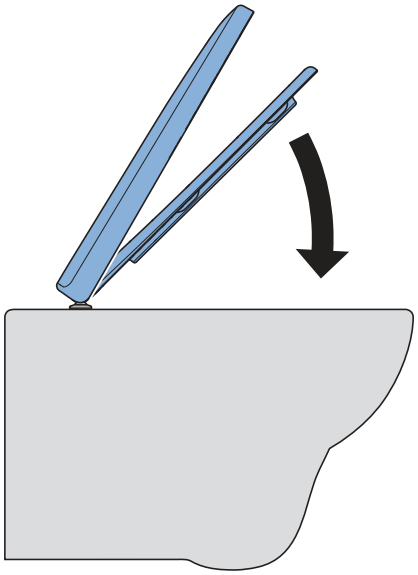

4

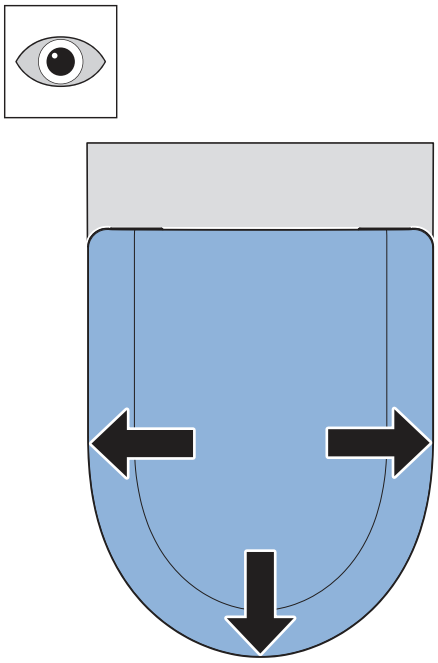

5

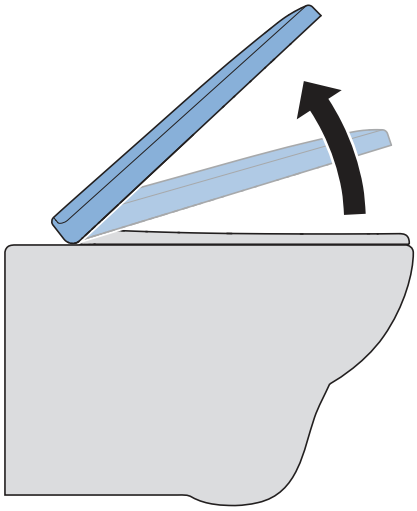

6

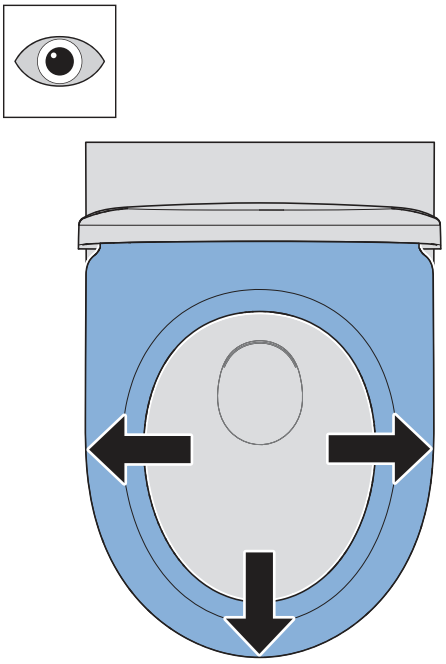

7

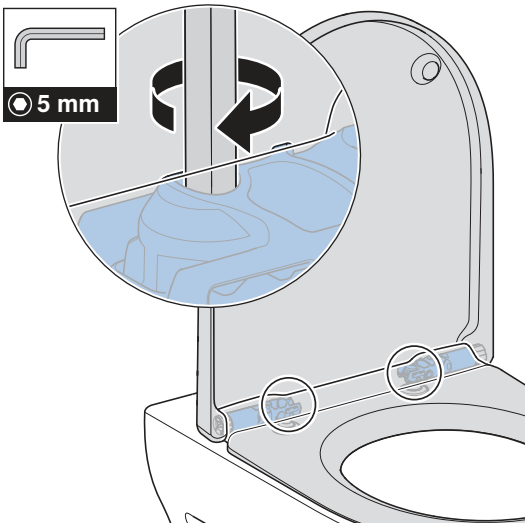

16694996235 © 03-2026
972.636.00.0(01)

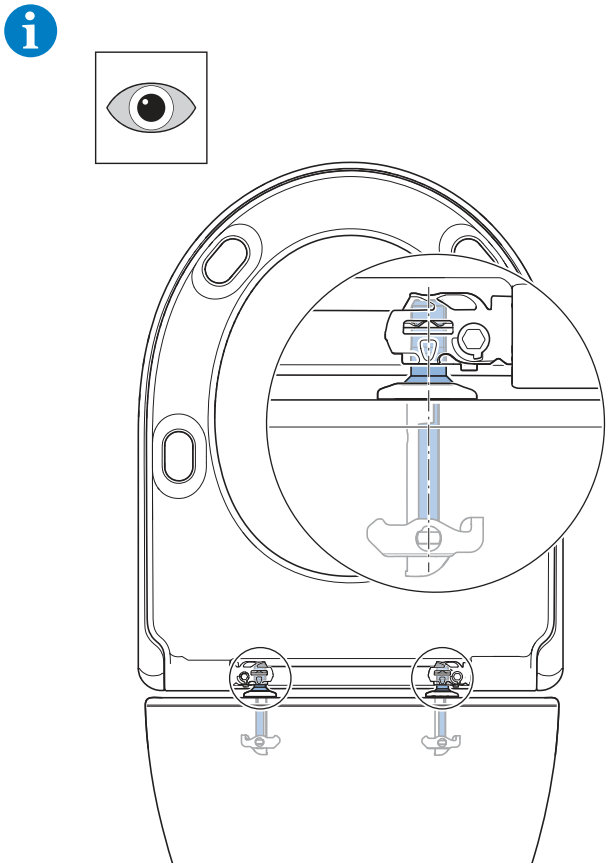

8

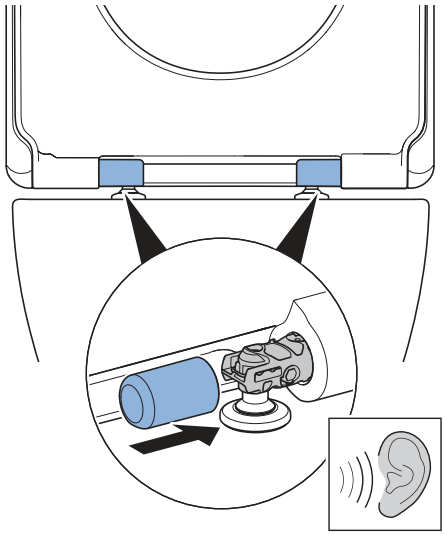

3

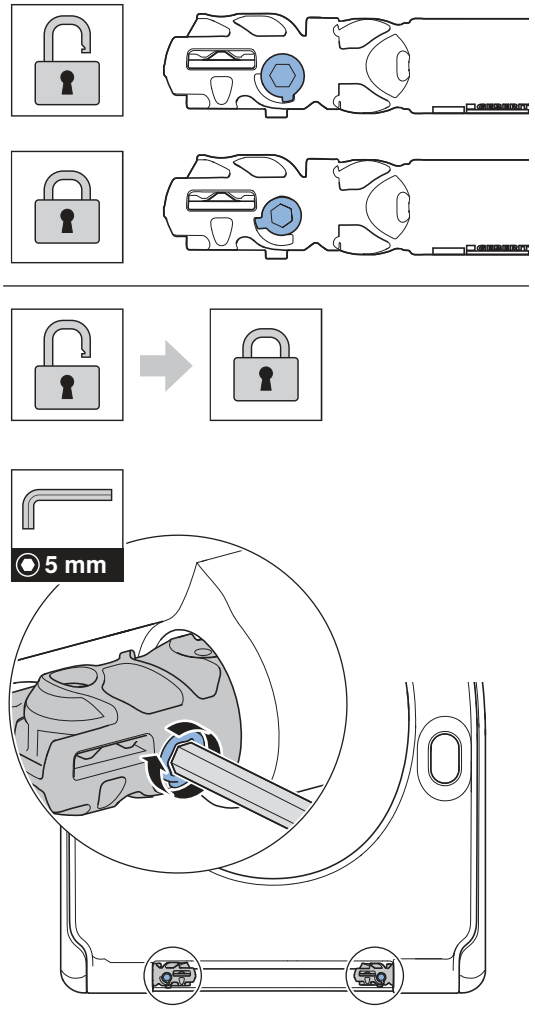

4

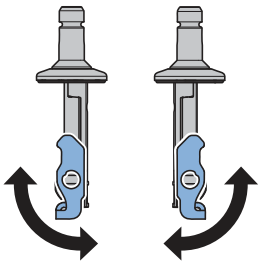

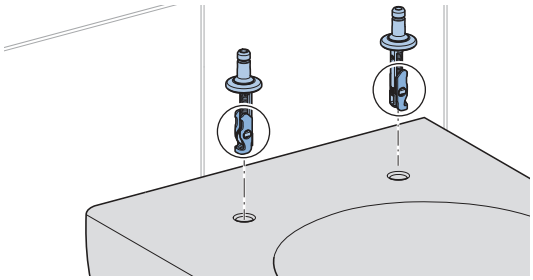

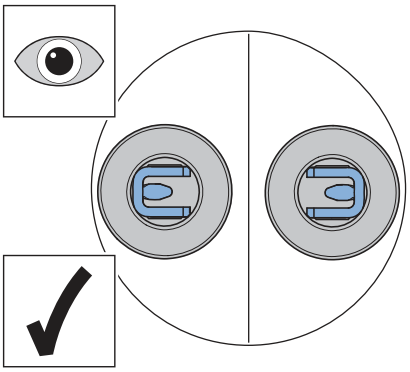

1

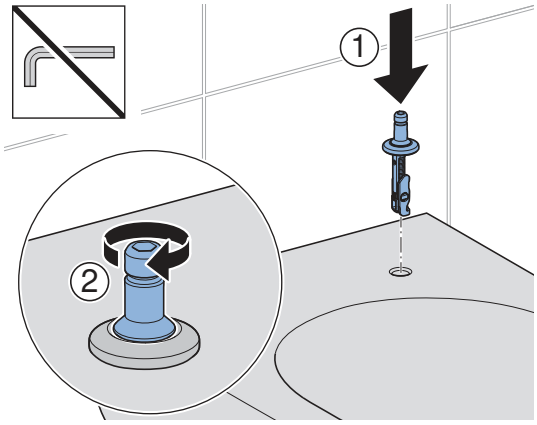

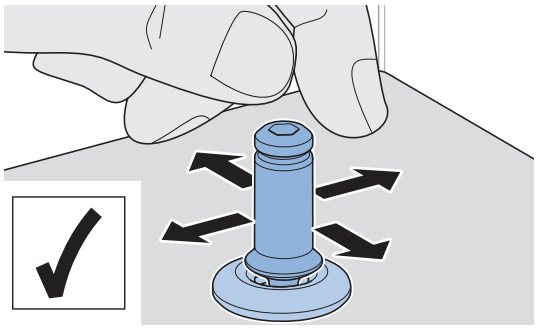

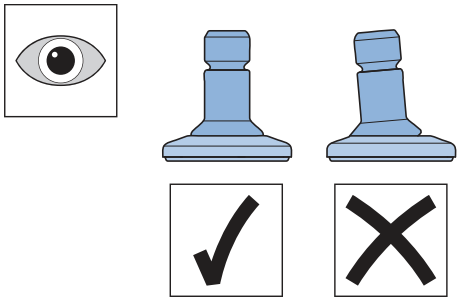

2

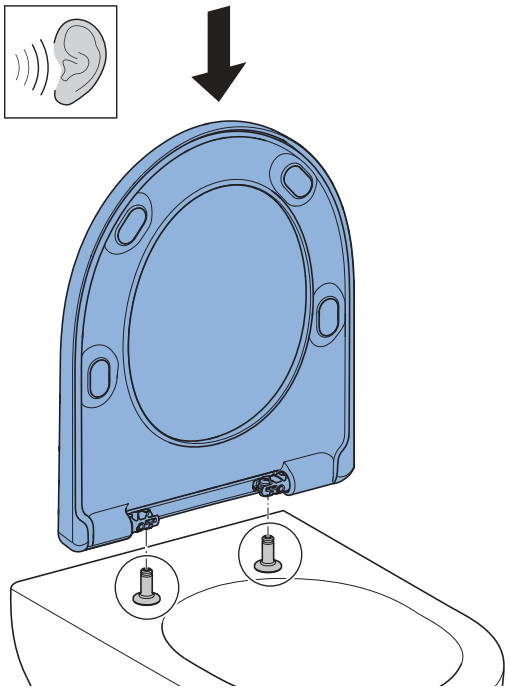

16694996235 © 03-2026
972.636.00.0(01)

3

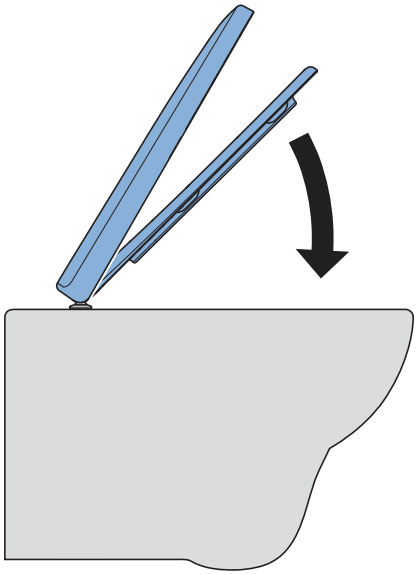

4

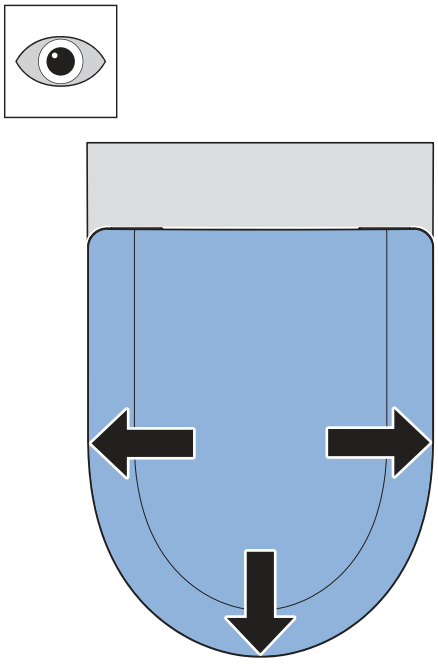

5

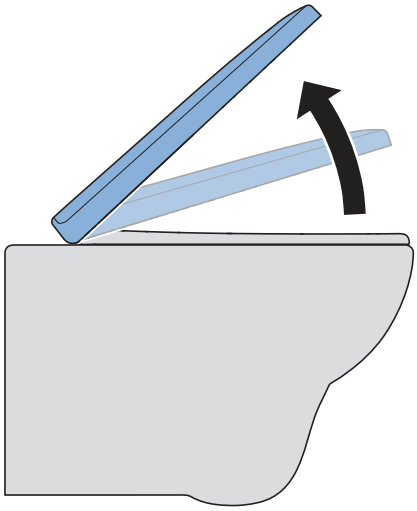

6

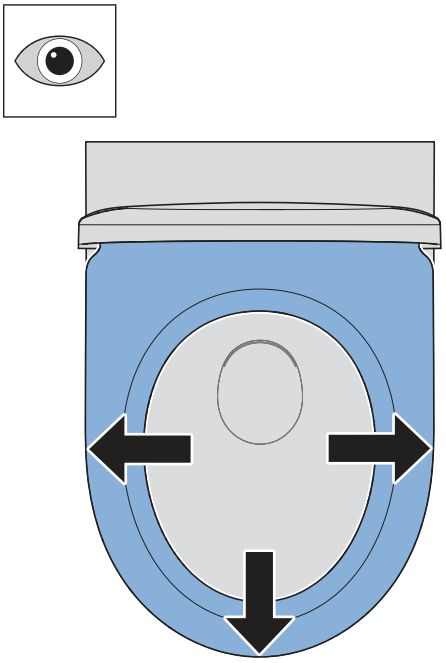

7

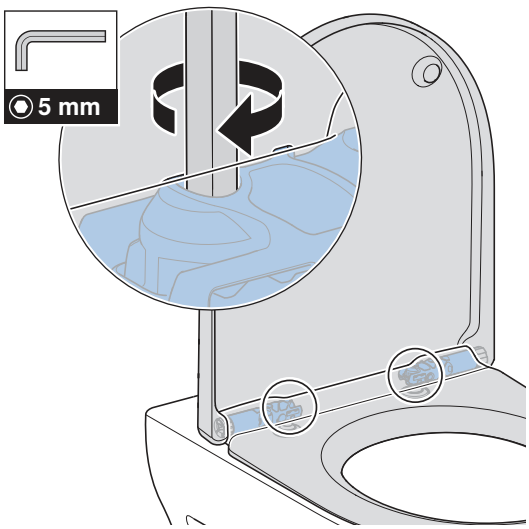

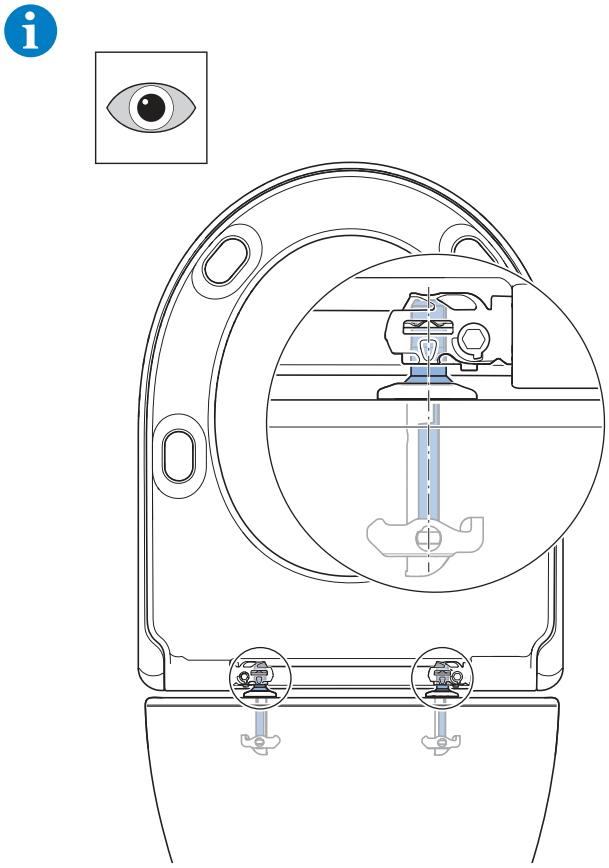

8

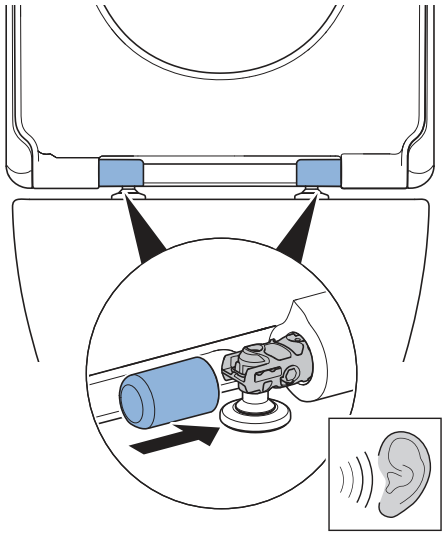

5

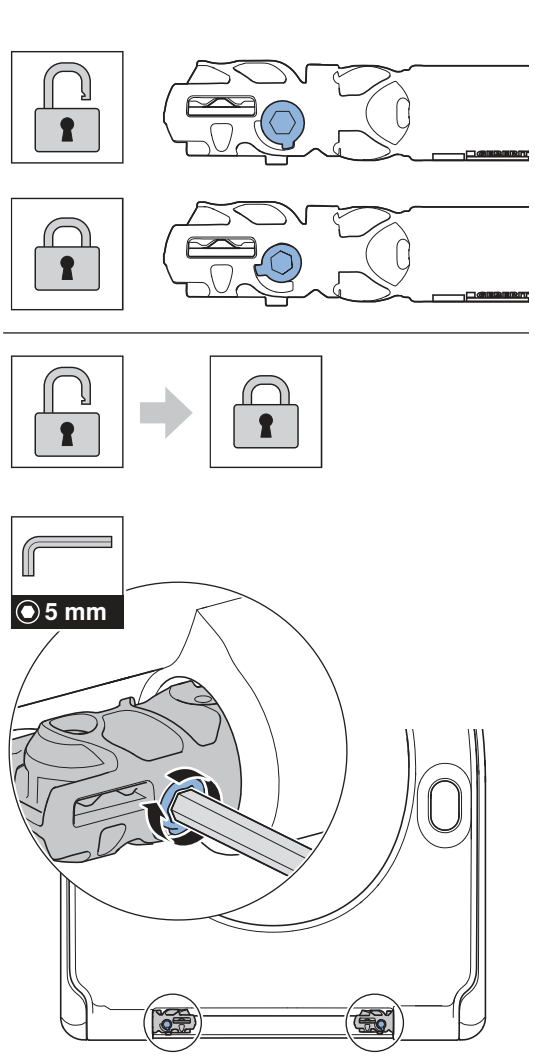

16694996235 © 03-2026
972.636.00.0(01)

6

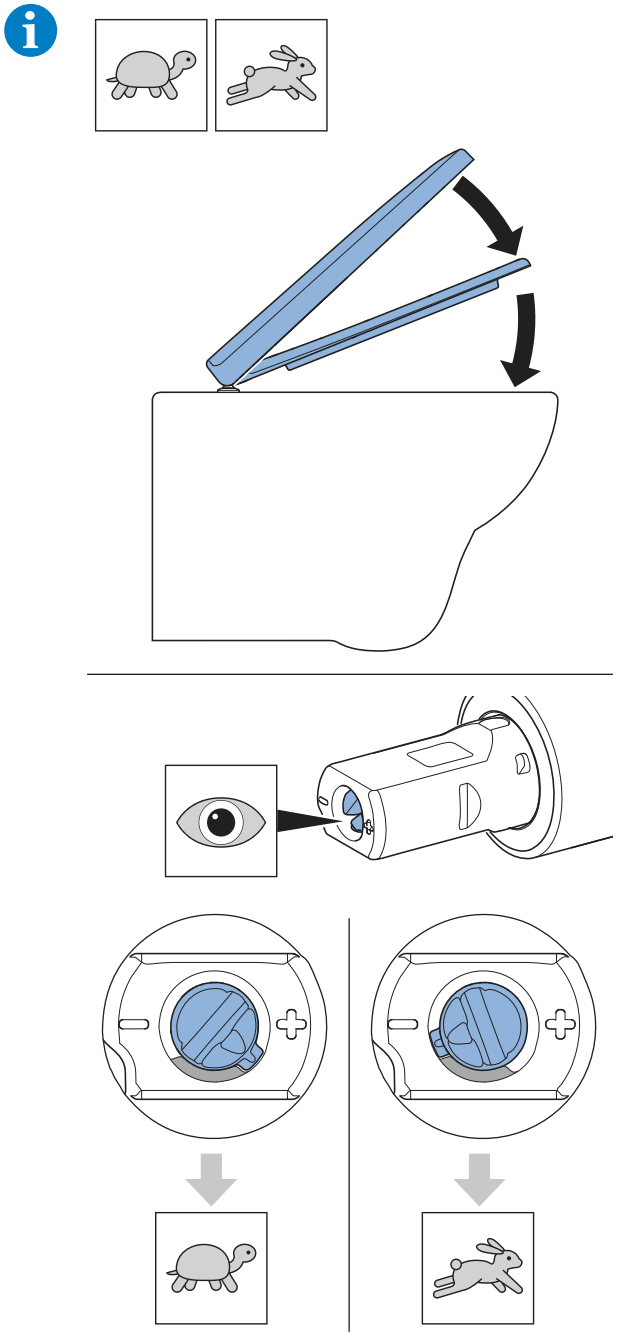

1

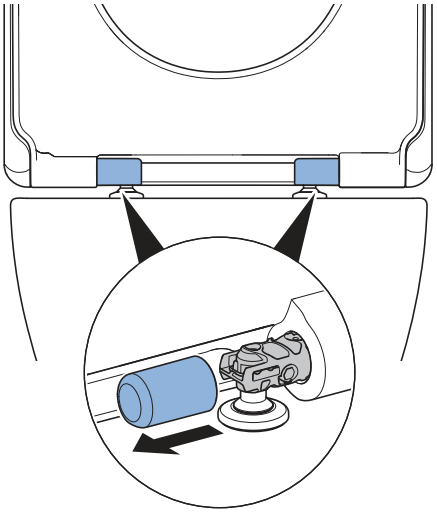

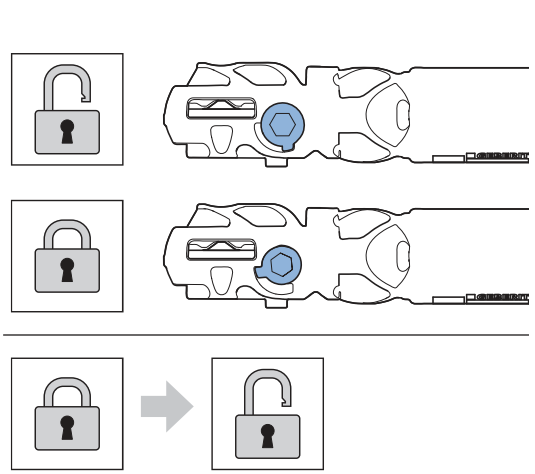

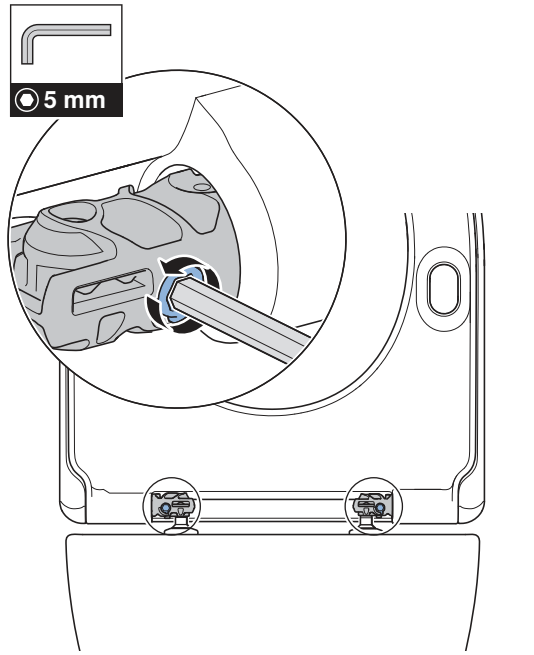

2

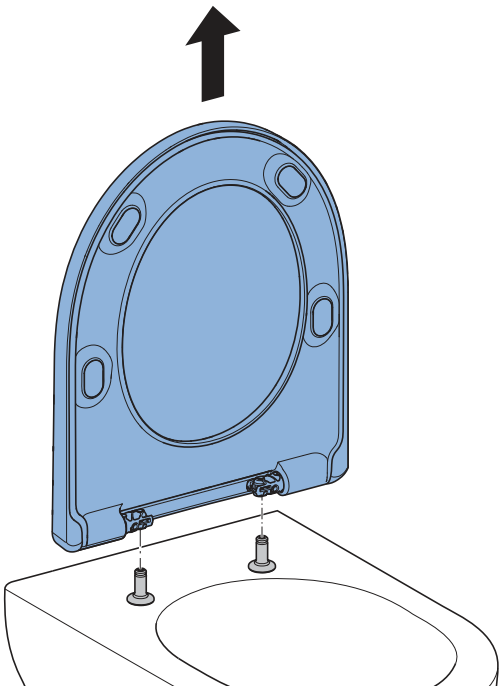

3

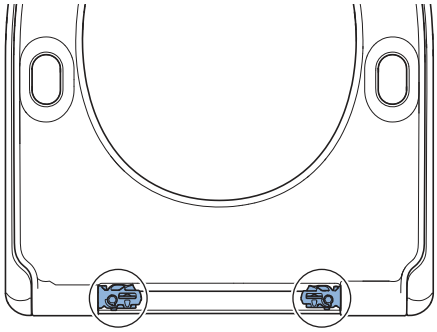

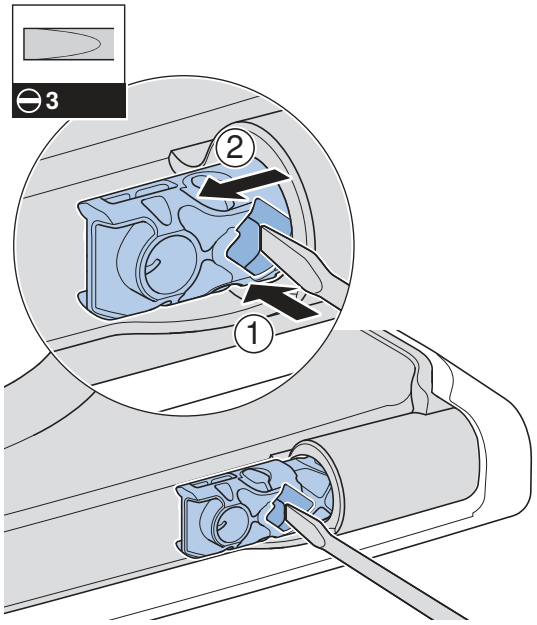

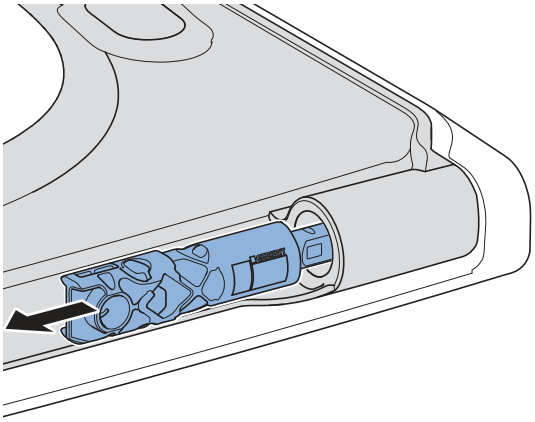

16694996235 © 03-2026
972.636.00.0(01)

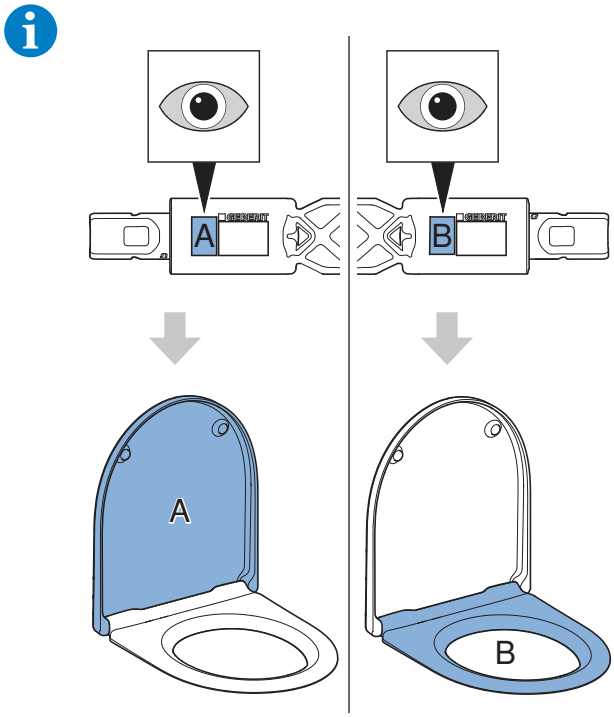

4

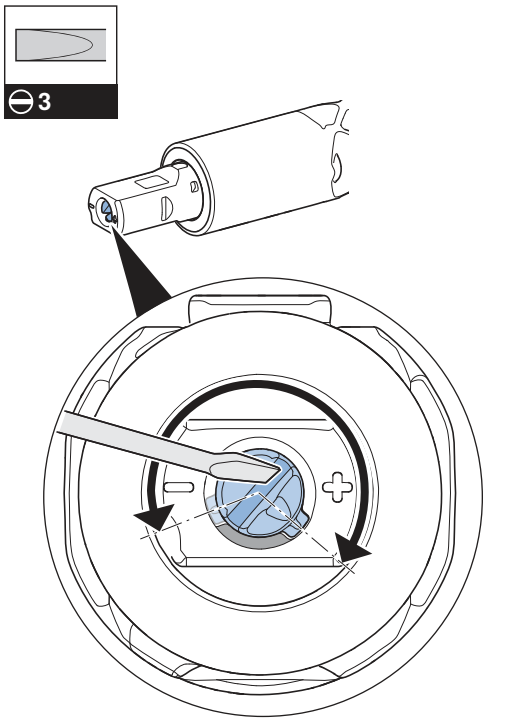

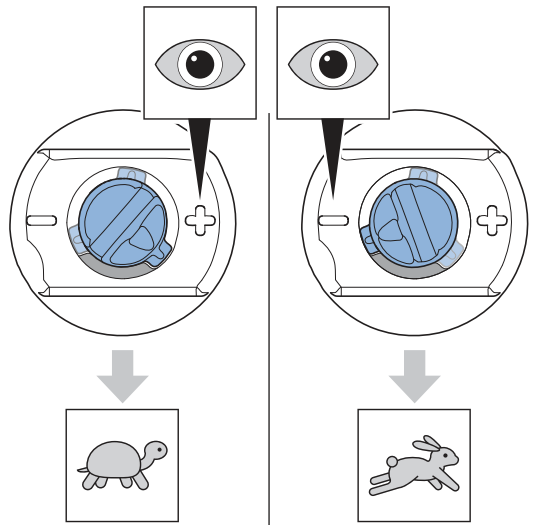

5

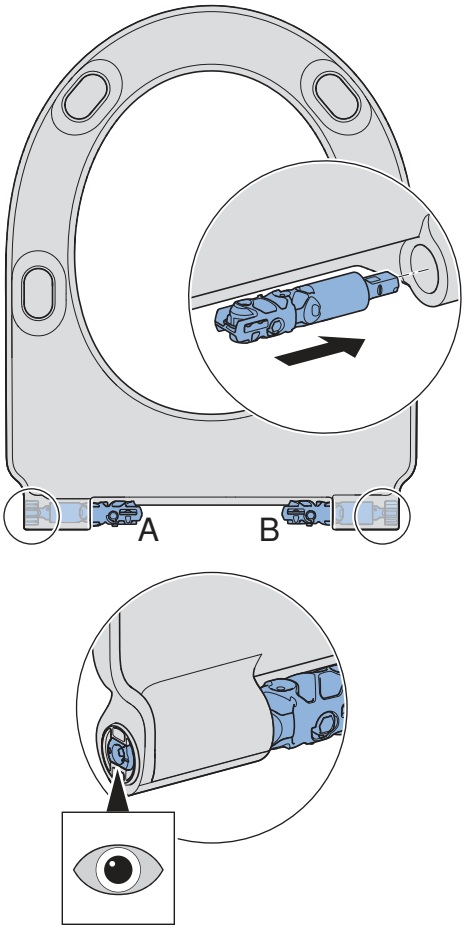

6

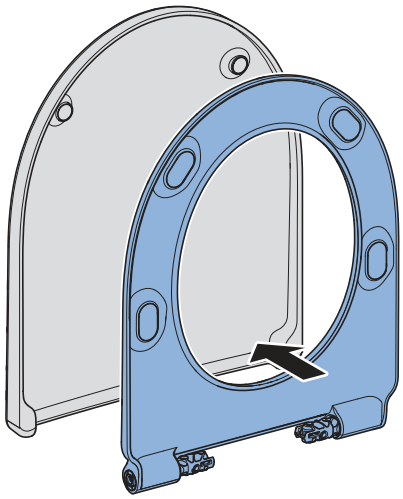

7

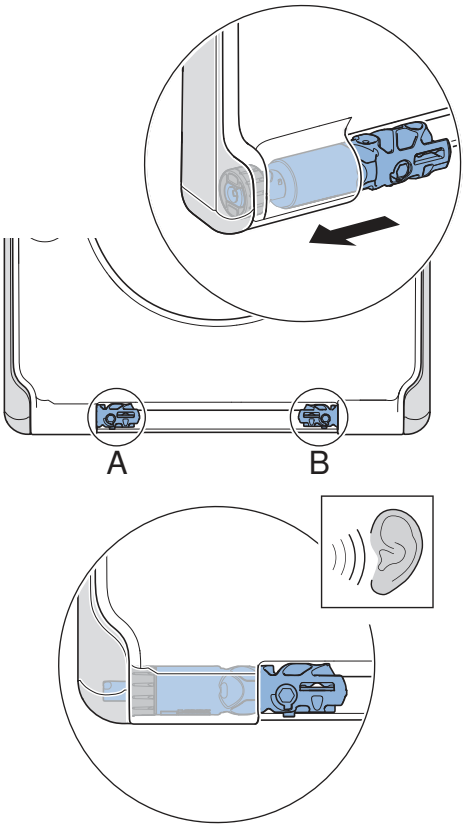

8

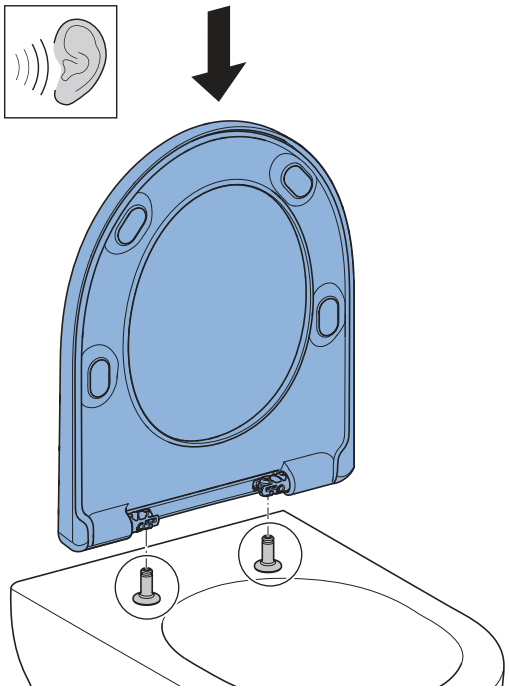

16694996235 © 03-2026
972.636.00.0(01)

9

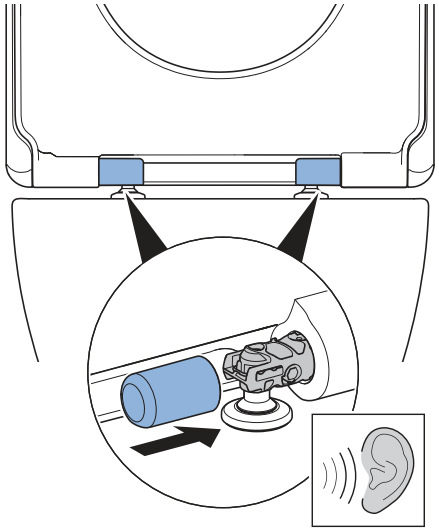

7

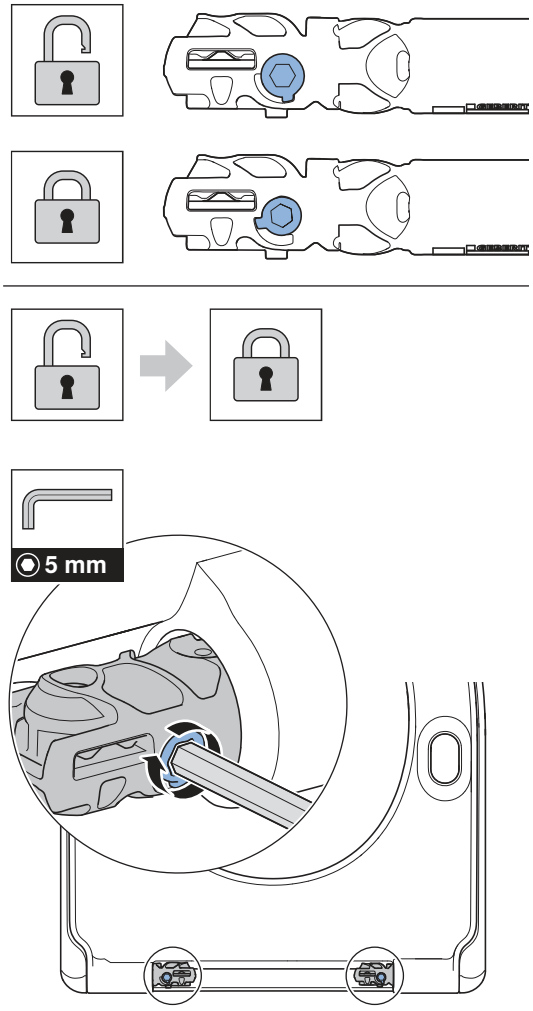

Geberit International AG
Schachenstrasse 77, CH-8645 Jona
documentation@geberit.com
www.geberit.com

16694996235 © 03-2026
972.636.00.0(01)