

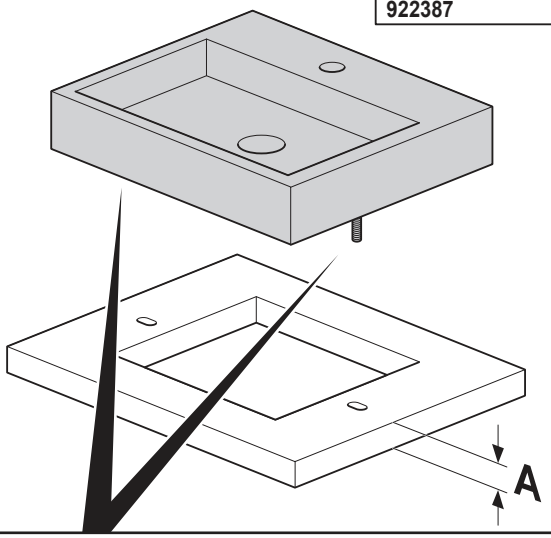

A	B	C
12 mm	24 mm	33 mm
16 mm	28 mm	33 mm
19 mm	29 mm	33 mm
22 mm	35 mm	45 mm
25 mm	37 mm	45 mm
28 mm	40 mm	45 mm
38 mm	50 mm	60 mm



